# SWORKz S350 BX1e series INSTRUCTION MANUAL

## INSTRUCTION

**Congratulations on your purchase of the new SWORKz S350 BX1e 1/8 scale off-road racing brushless power sport buggy.**

**Please read this manual thoroughly before you attempt to start or drive your S350 BX1e. This manual contains step-by-step instructions to help you complete, prepare for startup, and fine-tune your Buggy. Updates, setups, and product news will be posted on our website (www.sworkz.com), so check often.**

**If you should ever have any questions on your S350 BX1e, please feel free to contact our official SWORKz dealers and distributors, as they will be glad to help you. You may also contact us at any time for the most up to date information and support.**

**The SWORKz S350 BX1e 1/8 scale off-road ready to race brushless power buggy is derived from the DNA of S350 BE1 race kit.**

**Assembled in the same factory as the BE1, the BX1e incorporates many of SWORKz racing experience therefore giving strength and performance to the car.**

**The SWORKz design team put a lot of effort into the weight distribution of the S350 BX1e. This contributes a major factor in the car performance and general car setup.**

**The SWORKz S350 BE1 1/8 scale off-road racing brushless power buggy with its super narrow chassis design and also comes standard with Big Bore Shocks and oil filled differentials providing traction and balance on any off road tracks. The pivot ball steering system gives the driver good feedbacks while driving the S350 BX1e. The Standard set up is a good base start for any drivers.**

**Overall, the S350 BX1e is a perfect combination of design, high quality and outright performance.**

## S350 BX1e RTR Features :

1. **2 Speed Transmission Gear Box System.**
2. **Comes Standard with SWORKz X-System Transmission.**
3. **Front and Rear Big Bore Shocks.**
4. **Unique 4 Wheel Dust Protection System.**
5. **Double Protection Bumper Design.**
6. **Super Narrow Chassis Design.**
7. **Adjustable Front Upper and Lower Suspension Arm System.**
8. **Rear Kick Up Chassis System**
9. **Center Spur Gear Protection Cover.**
10. **Single Unit Motor Holder with Center Diff. Mount.**
11. **Steering Servo with Receiver Box System.**
12. **Front and Rear Aluminum Chassis Brace.**

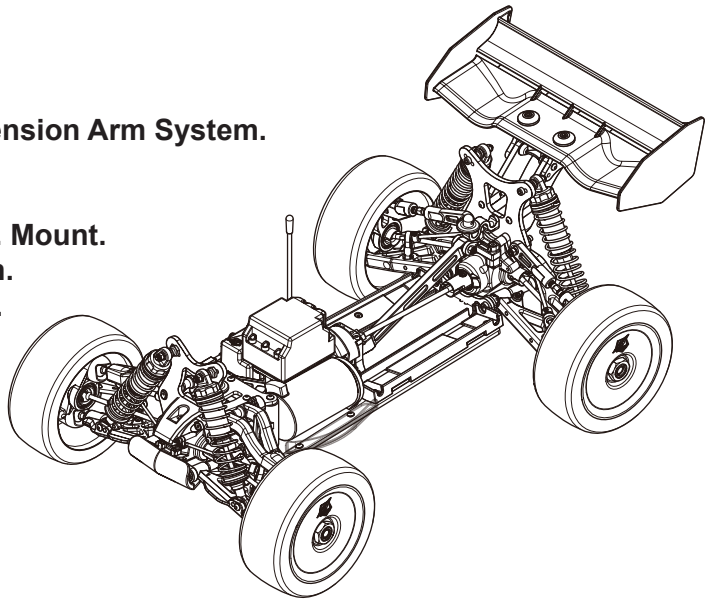

| Specification | |
|---|---|
| Length: | 535mm |
| Width: | 308mm |
| Height: | 220mm |
| Ground Clearance: | 70mm |
| Wheelbase: | 321-326mm |
| Track: | F:306mm / R:306mm |
| Gear Ratio: | C:45~47/13~14T,F/R 43/13T |
| Weight: | 3600g |

# WARRANTY

**Your SWORKz S350 BX1e kit warranty covers workmanship and manufacturing defects of the original and unmodified parts. Warranty claims resulting from crashes, abuse, improper operation, improper mounting, improper adjustment or lack of maintenance will not be honored.**
**Contact your local hobby shop or SWORKz distributor for all claims and questions. Claims must be well documented. All Claims are subject to expert examination approval by SWORKz .**

www.sworkz.com

MORE SPEED MORE FUN

## INDEX


| | |
|---|---|
| INSTRUCTION | 2 |
| Warranty | 3 |
| Required Equipment for Operation | 5 |
| Operation Guide/Safety Precautions | 6 |
| Assembly Steps | 7-34 |
| Set-up Sheet | 35 |
| SWORKz Driver's Set-up Sheet for Reference | 36 |
| S350 BX1e Part No. List | 37-38 |
| S350 BX1e Spare & Option Part List | 38-39 |
| Company Info | 40 |
| Explosion View with Screw Items | 41-42 |

**This radio control racing car is not a toy!**
**This high-performance R/C model is recommended for ages 14 and older.**

# Required Equipment for Operation

## Radio Gear

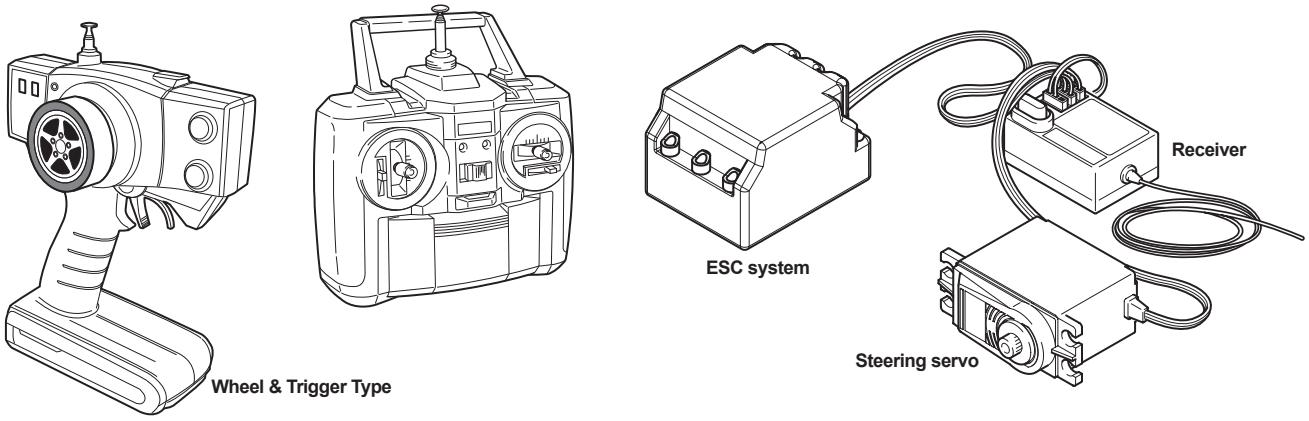


## Required for 1/8 Brushless Motor series (Maximun up for 4168mm 2250KV)

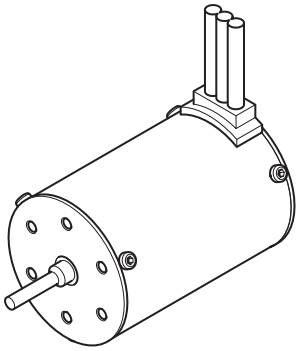

## Charger and LiPo Battery

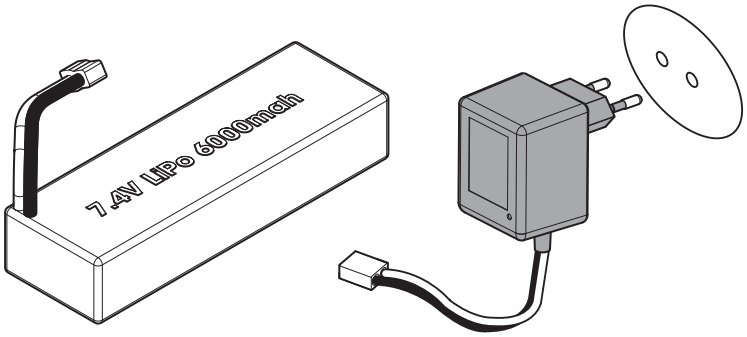


## Tools Recommended

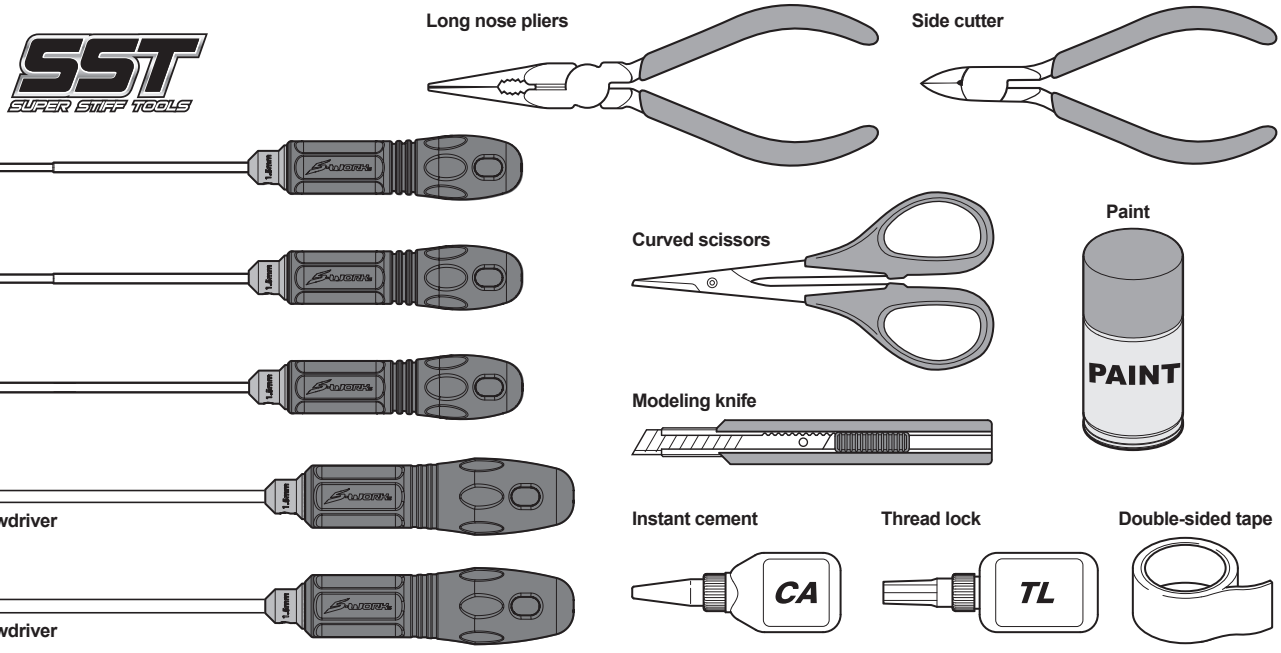


## Included items

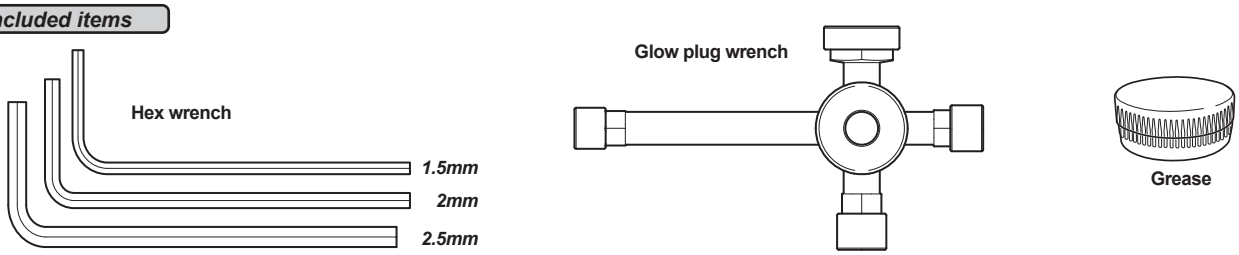

## Operation Guide

Assemble front and rear

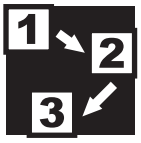


Assemble in the specified order

Assemble both left and right sides

Assemble for 2 sets

Assemble for 4 sets

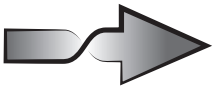

overturn

Thread Locking Compound

Grease

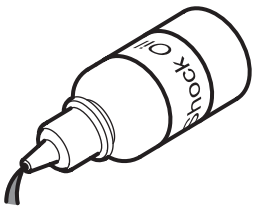


Pure Silicone Oil

## Safety Precautions

**The SWORKz S350 BX1e is a high performance radio control model which needs to be operated with caution and common sense.**

**The S350 BX1e Sport RTR is not intended for children under the age of 14 without adult supervision. SWORKz shall not be held liable for any loss or damages, whether direct, indirect, act of nature, arising from abuse or misuse of this product or any other product required.**

**- The LiPO Battery can be dangerous if improperly handled.**

**- Always keep your LiPO Battery in a cool area and never use it near flames, sparks, or while smoking.**

**- Keep your LiPO Battery, and all other flammables, out of the reach of children.**

**- After running your car, all parts of the Motor and ESC can become extremely hot. Be careful not to touch these parts.**

**- This model is controlled by your radio controller and can be vulnerable to interference from many outside sources. This interference can cause a loss of control so it is necessary to operate this model in an open area to avoid personal or property damage. Always ensure turning on your radio first.**

**- Keep all the products included in the package out of the reach of children.**

**- This model contains many fast rotating parts. Never touch them during operation.**

**- Follow the instructions included with your radio gear.**

**- Never operate your model near people or property. The speed of this model has the potential to injure people and or damage property if misused.**

**- Always use original SWORKz spare parts and option parts.**

**- Always ensure that the buggy is in proper working condition before use.**

**- Always exercise caution when using any tools.**

**330015**
*Pin M2.2x9.9mm* ***x4***

**400002**
*O-ring S5 4.8X1.5* ***x4***

**116006**
*Ball Bearing 8x16x5mm* ***x4***

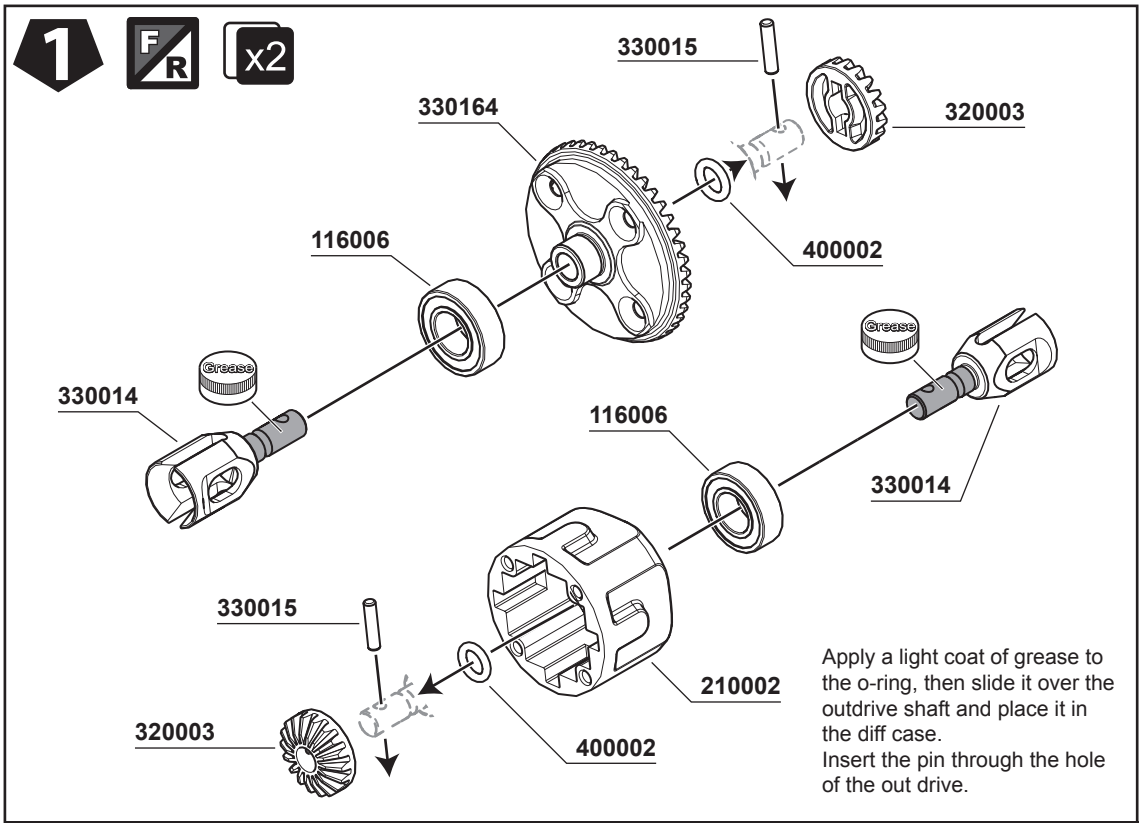


Apply a light coat of grease to the o-ring, then slide it over the outdrive shaft and place it in the diff case.
Insert the pin through the hole of the out drive.

**108003**
*M3x10mm FH/ST HEX Screw* ***x8***

**330013**
*Bevel Gear Shaft* ***x4***

**101004**
*Washer 3.5X10X0.2mm* ***x8***

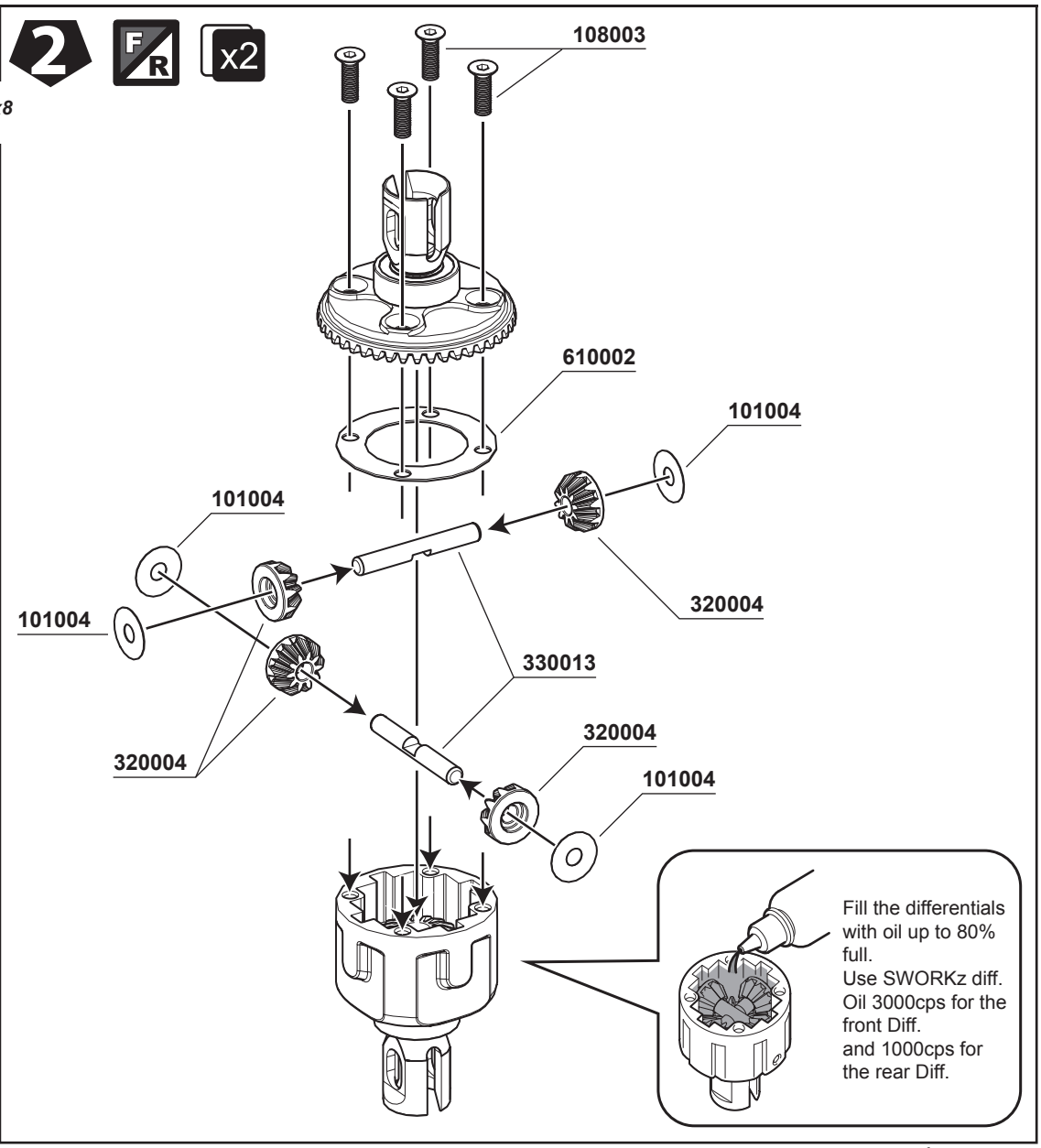


Fill the differentials with oil up to 80% full.
Use SWORKz diff. Oil 3000cps for the front Diff.
and 1000cps for the rear Diff.

330015
*Pin M2.2x9.9mm* x2

400002
*O-ring S5 4.8X1.5* x2

116006
*Ball Bearing 8x16x5mm* x2

## 3

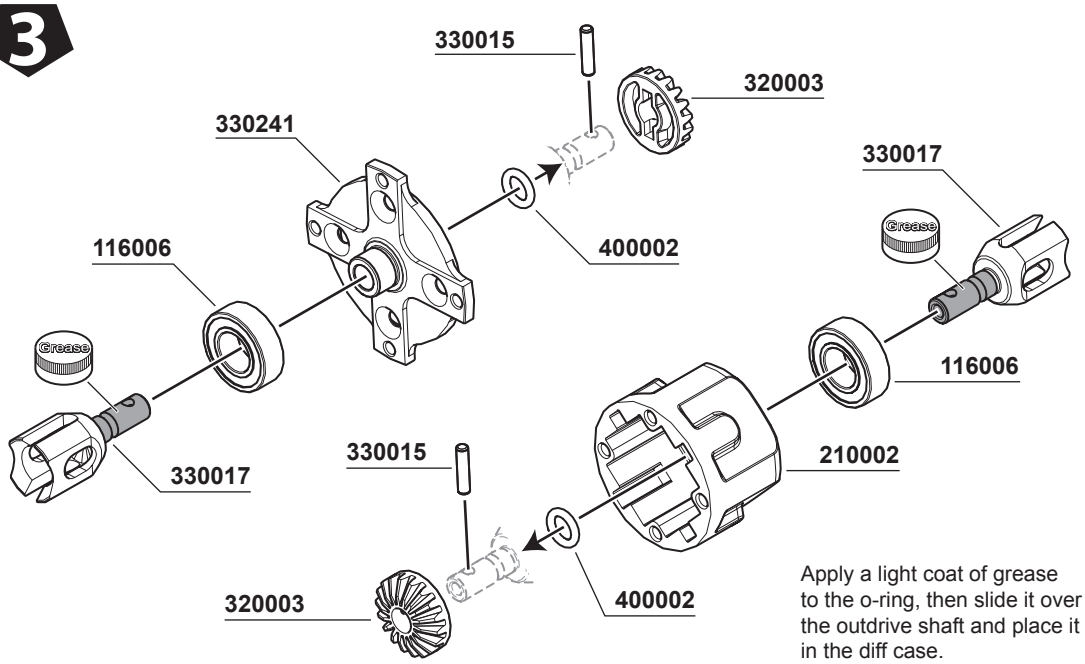


Apply a light coat of grease to the o-ring, then slide it over the outdrive shaft and place it in the diff case.
Insert the pin through the hole of the out drive.

108007
*M3x6mm FH/ST HEX Screw* x4

108003
*M3x10mm FH/ST HEX Screw* x4

330013
*Bevel Gear Shaft* x2

101004
*Washer 3.5X10X0.2mm* x4

## 4

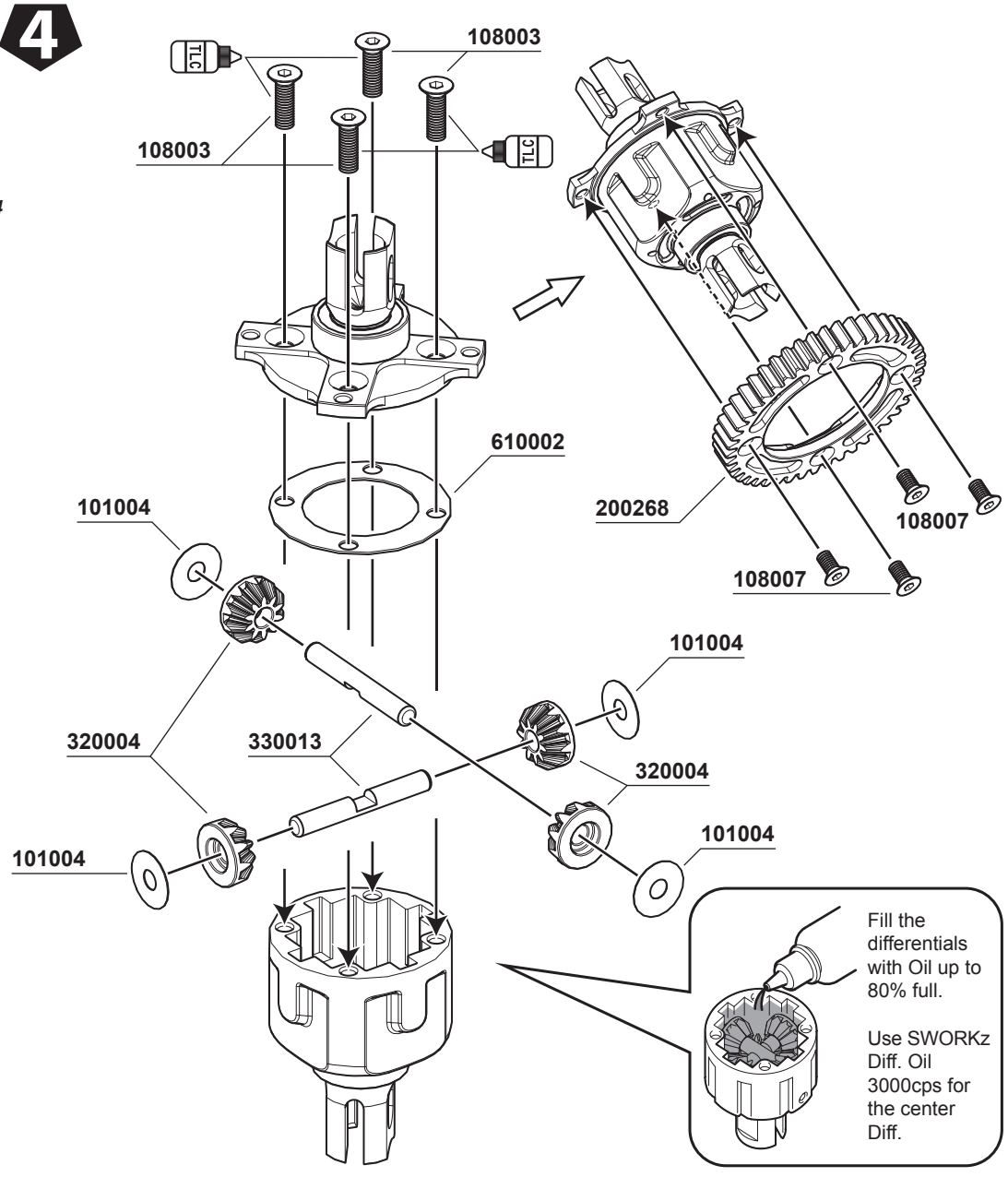

# 5 Front

**104001**
*M5x4mm Set Screw* ***x1***

**106010**
*M3x6mm Hex Socket OH/TP Screw* ***x3***

**108001**
*M3x12mm FH/ST HEX Screw* ***x4***

**106012**
*M3x35mmHex Soket OH/TP Screw* ***x2***

**101018**
*SHIM 13x16x0.2mm* ***x2***

**116006**
*Ball Bearing 8x16x5mm* ***x2***

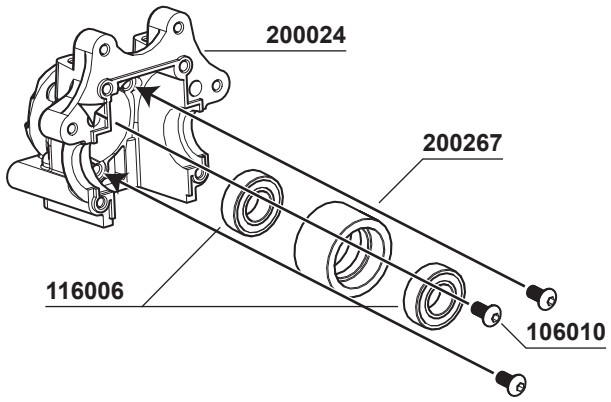


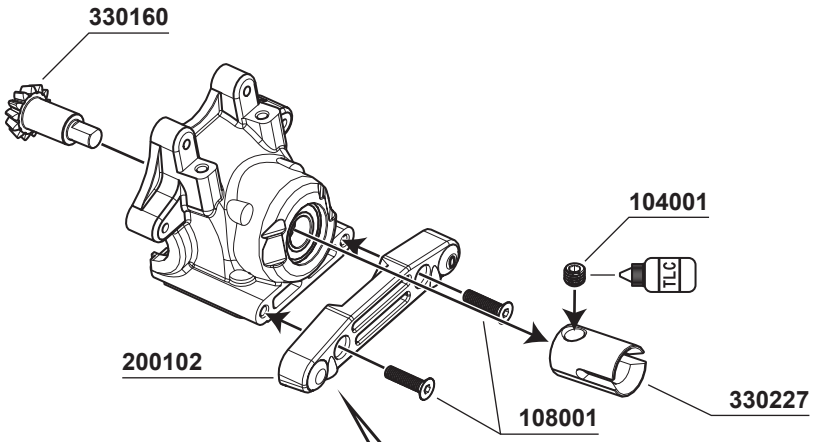


The standard front lower arm holder (200102) can offer 0° kick-up for your front lower suspension. You may use the optional one (200103) to get 1° kick-up for your front lower suspension.
**200102 Front Lower Arm Holder (0 degree)**
**200103 Front Lower Arm Holder (1 degree)**

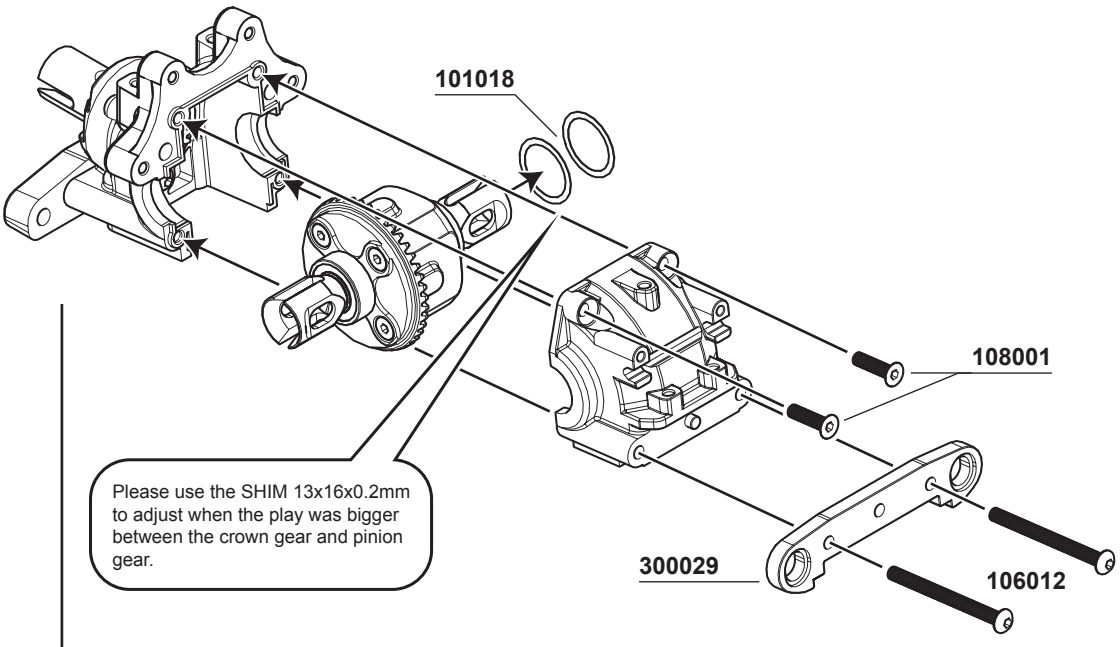


Please use the SHIM 13x16x0.2mm to adjust when the play was bigger between the crown gear and pinion gear.

104001
*M5x4mm Set Screw* ***x1***

106010
*M3x6mm Hex Socket OH/TP Screw* ***x3***

106003
*M3x16mm Hex Socket OH/TP Screw* ***x2***

108001
*M3x12mm FH/ST HEX Screw* ***x2***

108008
*M3x35mm FH/ST HEX Screw* ***x2***

101018
*SHIM 13x16x0.2mm* ***x2***

116006
*Ball Bearing 8x16x5mm* ***x2***

## 6 Rear

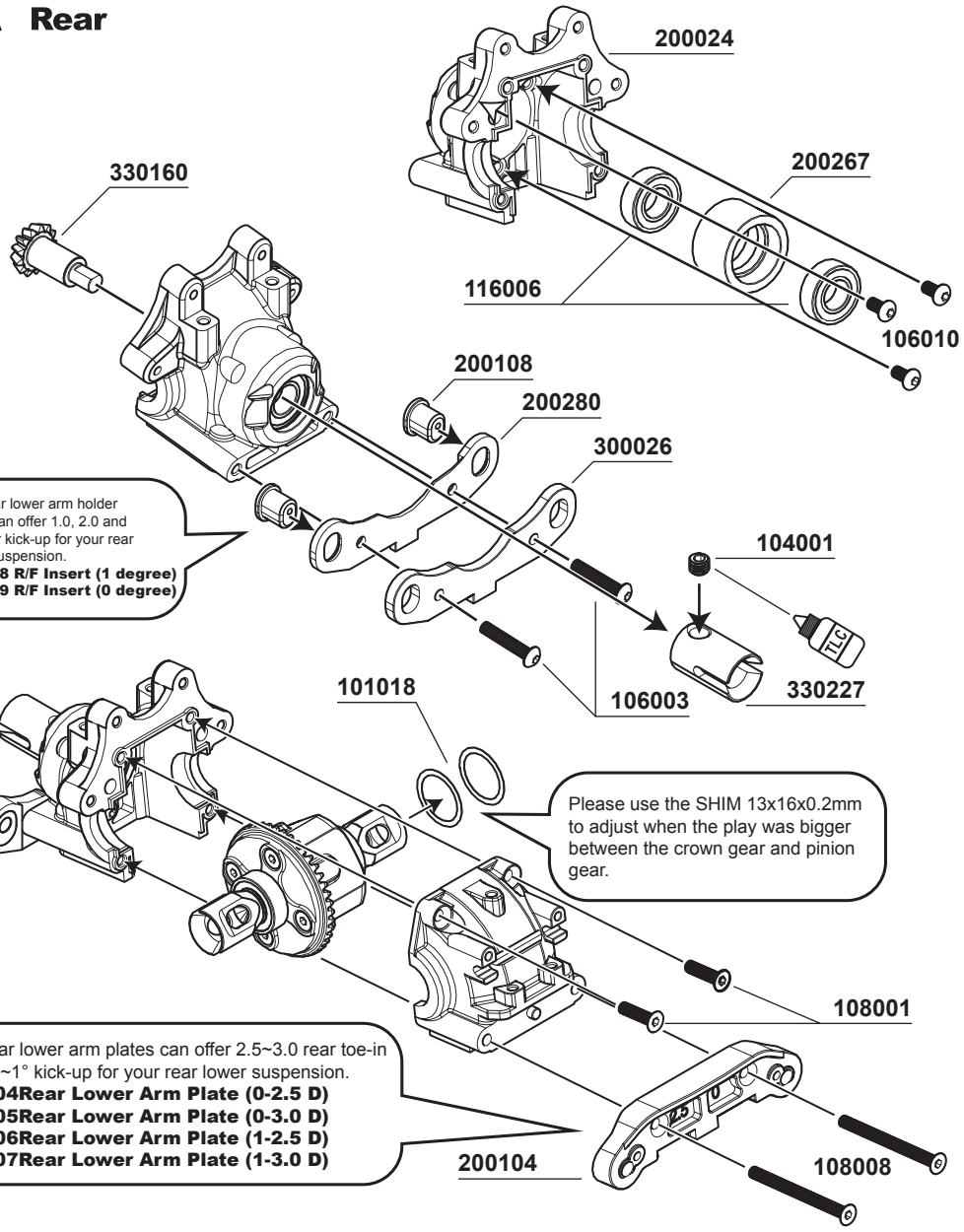


104007
*M4x8mm Set Screw* ***x2***

106005
*M3x15mm Hex Socket OH/TP Screw* ***x2***

## 7 R L x2

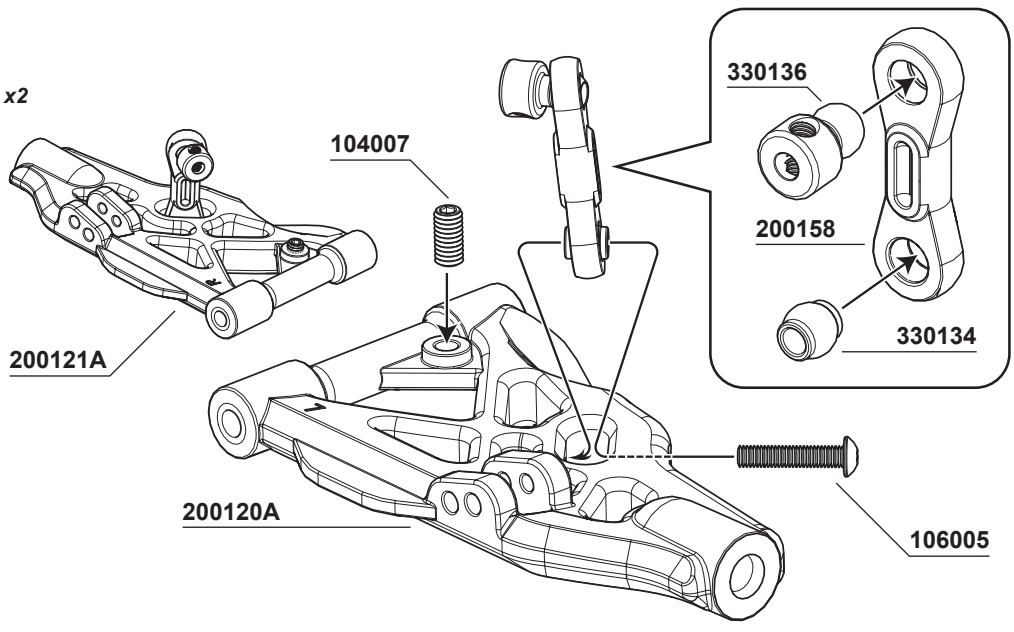

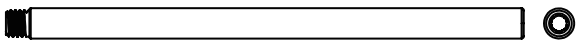

330103
*Front/Rear Lower Arm HingPin* x2

## 8

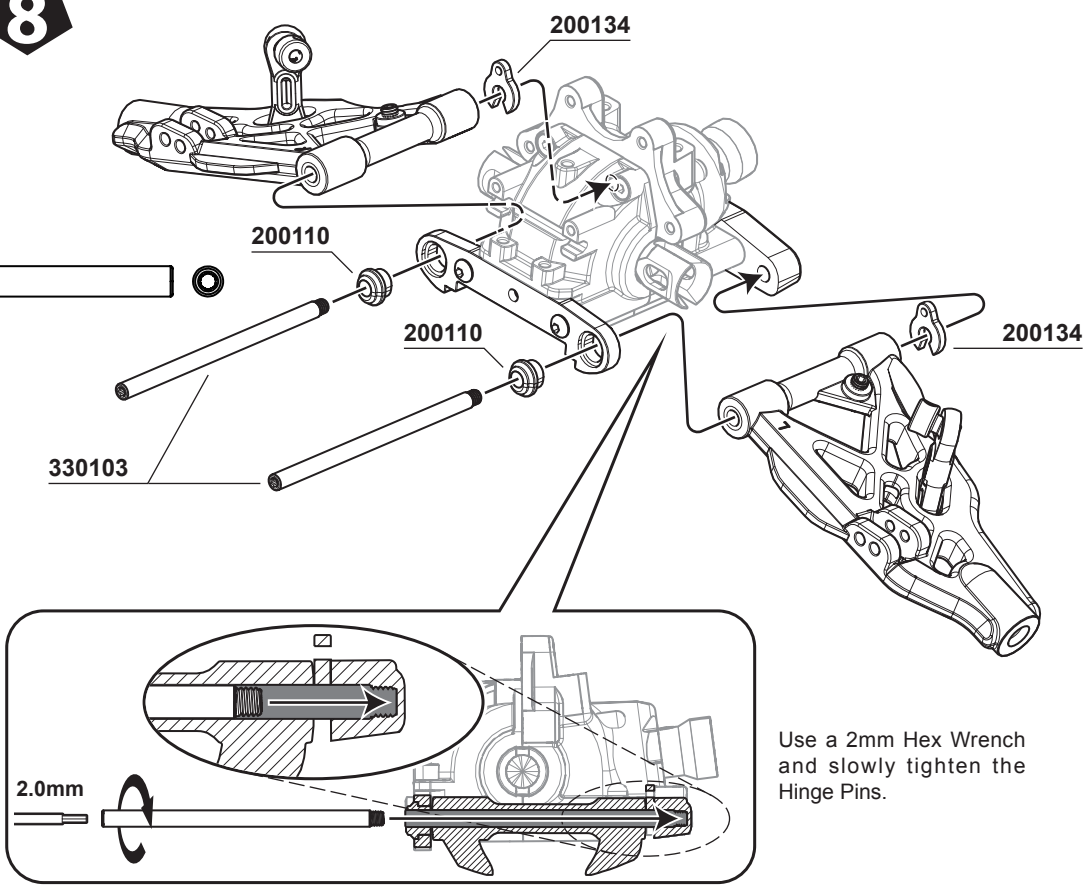


Use a 2mm Hex Wrench and slowly tighten the Hinge Pins.

104004
*M3x3mm Set Screw* x2

## 9

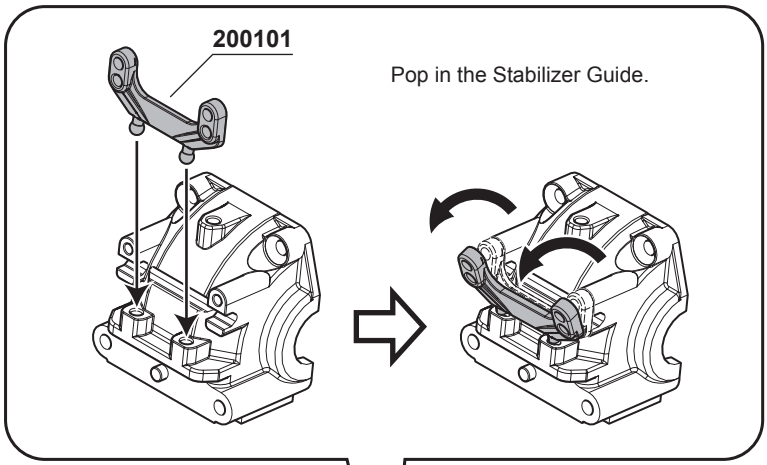


Pop in the Stabilizer Guide.

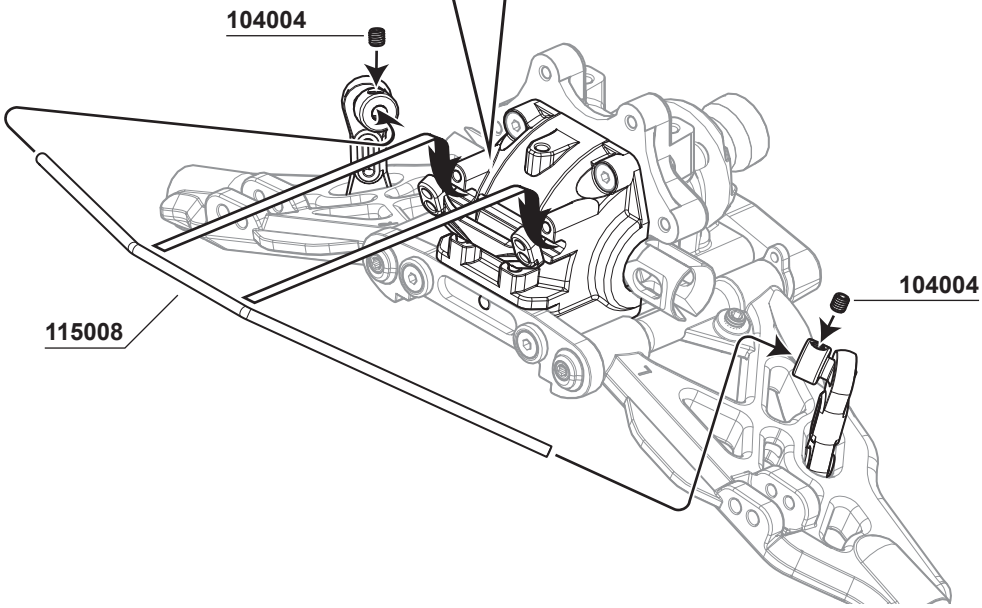

**104005**
*M3x4mm Set Screw* ***x2***

**105004**
*M2.6x6mm Cap Screw* ***x2***

## 10

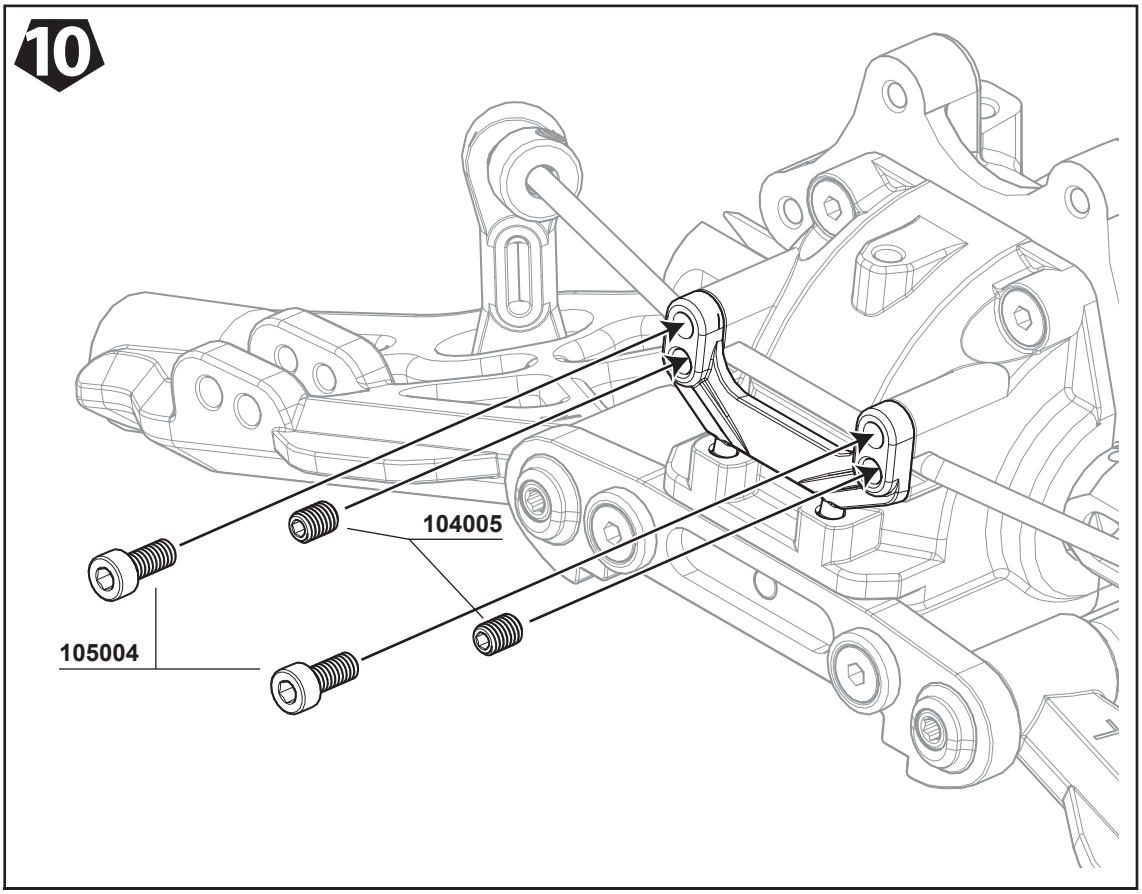


**106002**
*M3x10mm Hex Socket OH/TP Screw* ***x4***

## 11

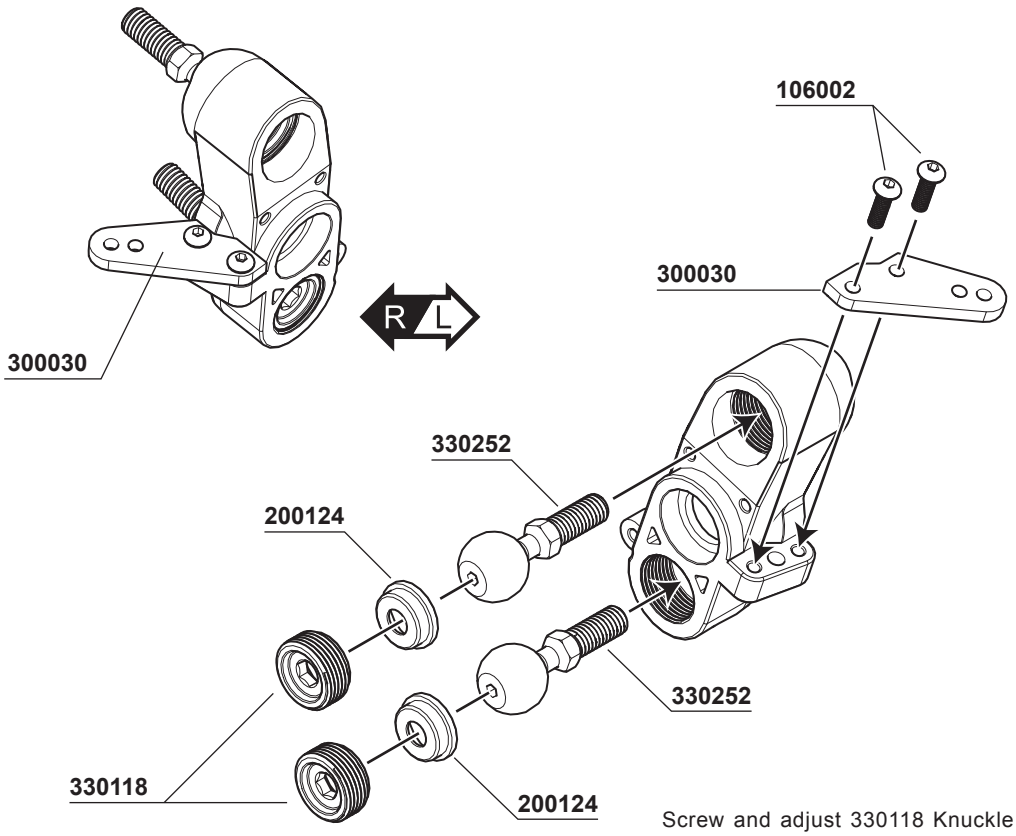


Screw and adjust 330118 Knuckle Pivot Ball Nut so as the pivot ball can be moved smoothly.

104001
*M5x4mm Set Screw* ***x2***

330111
*Pin M2.5x14.8mm* ***x2***

330124
*Pin M3.0x16.8mm* ***x2***

116006
*Ball Bearing 8x16x5mm* ***x2***

116012
*Ball Bearing 15x21x4mm* ***x2***

## 12

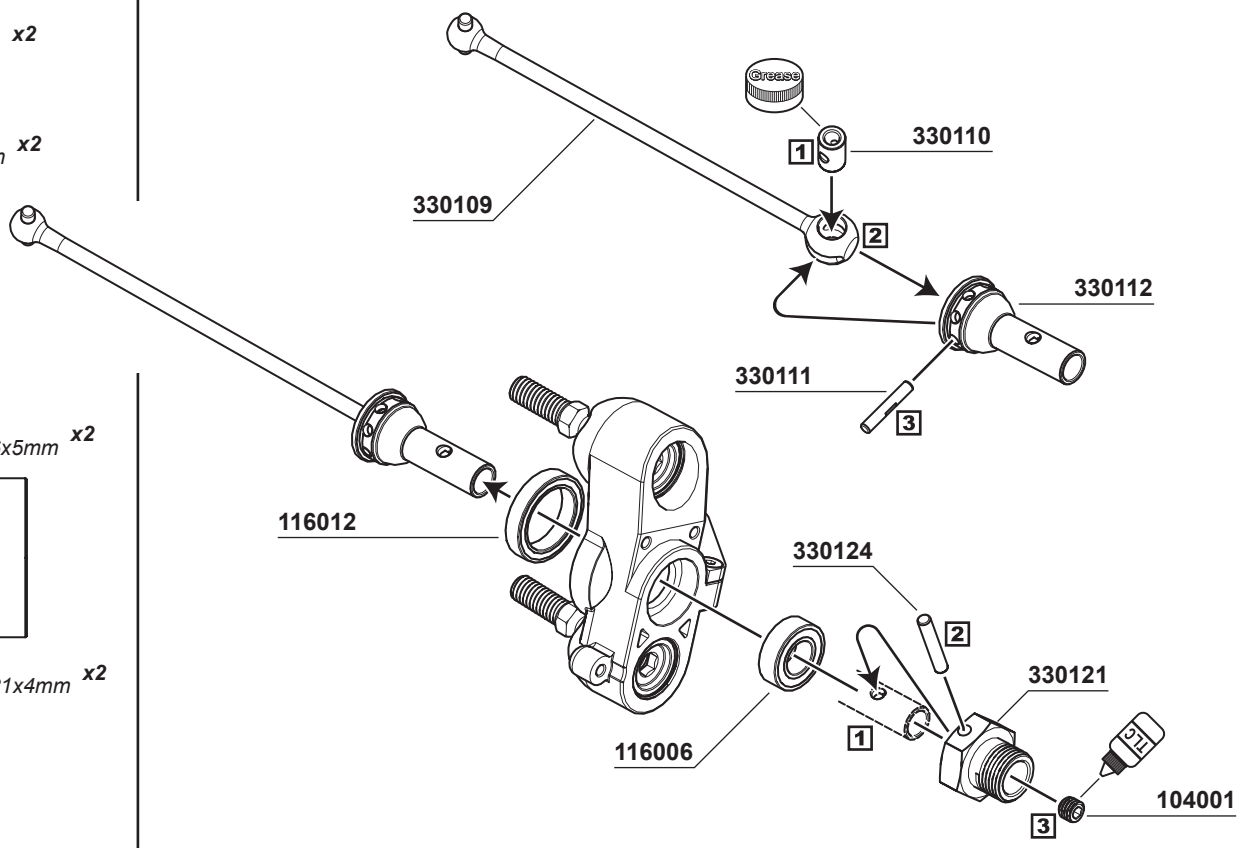


106002
*M3x10mm Hex Socket OH/TP Screw* ***x5***

103001
*M3 Nut Lock* ***x2***

## 13

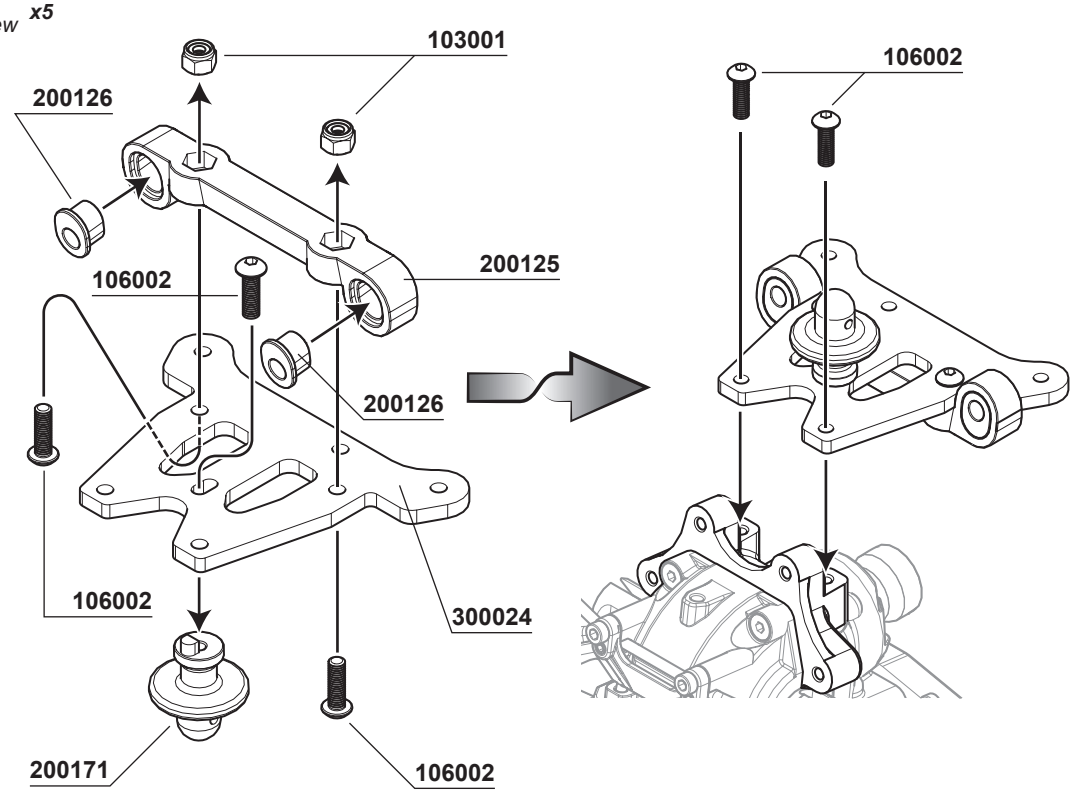

## 14

106008
*M3x12mm Hex Socket OH/TP Screw* x4

330119
*Front Upper Arm HingPin* x2

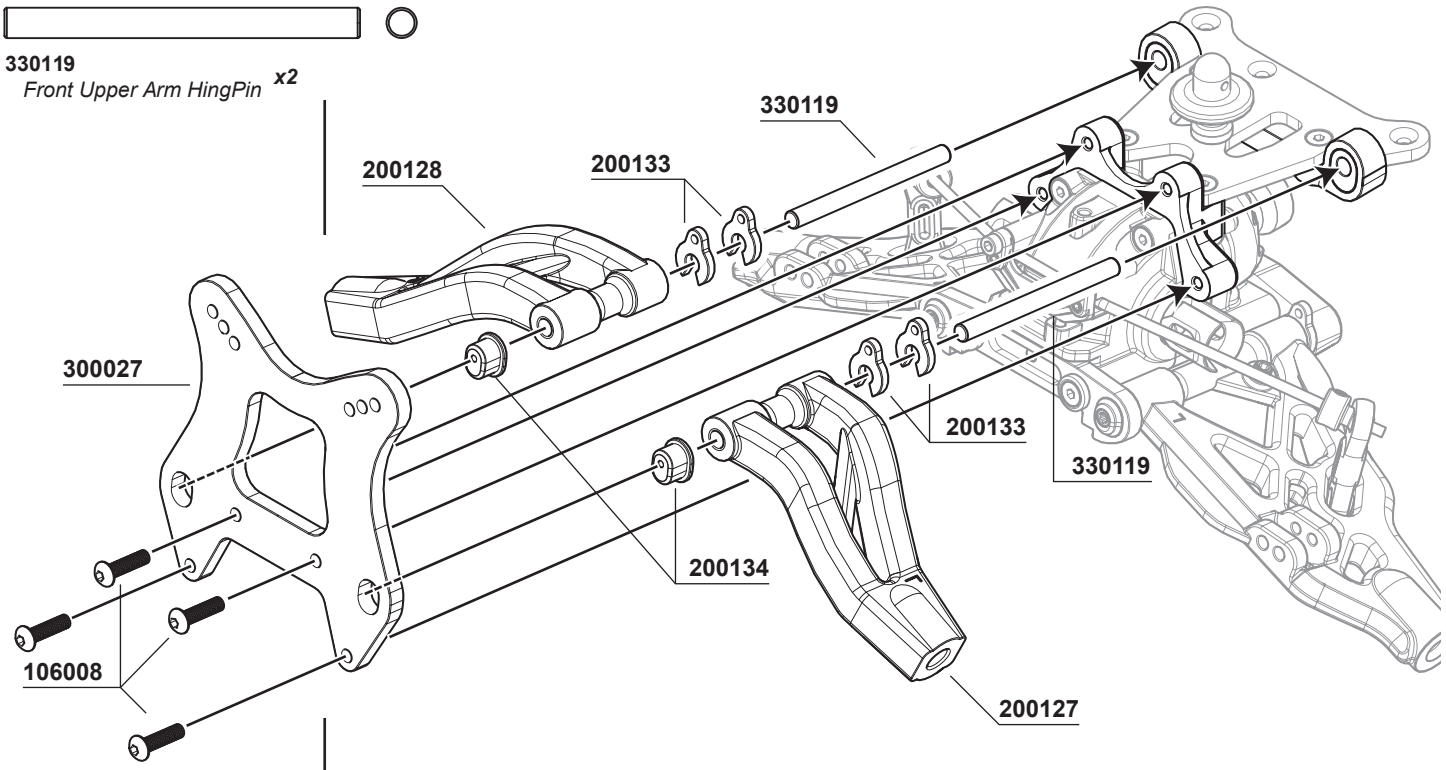


## 15

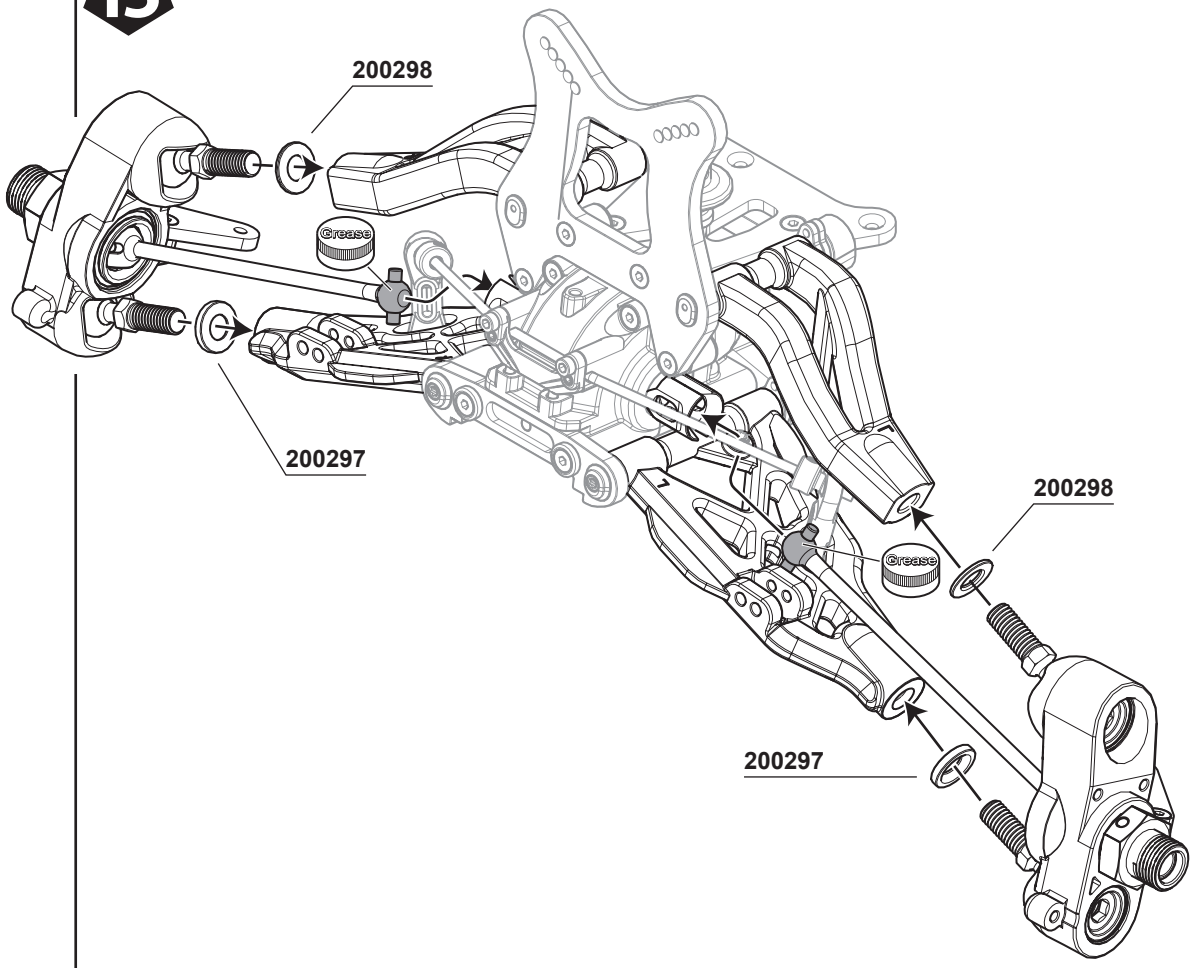

**330251**
*Steering Plate Bushing* ***x2***

**106008**
*M3x12mm Hex Socket OH/TP Screw* ***x2***

**103001**
*M3 Nut Lock* ***x2***

**101021**
*M3x8xT1mm* ***x2***

## 16

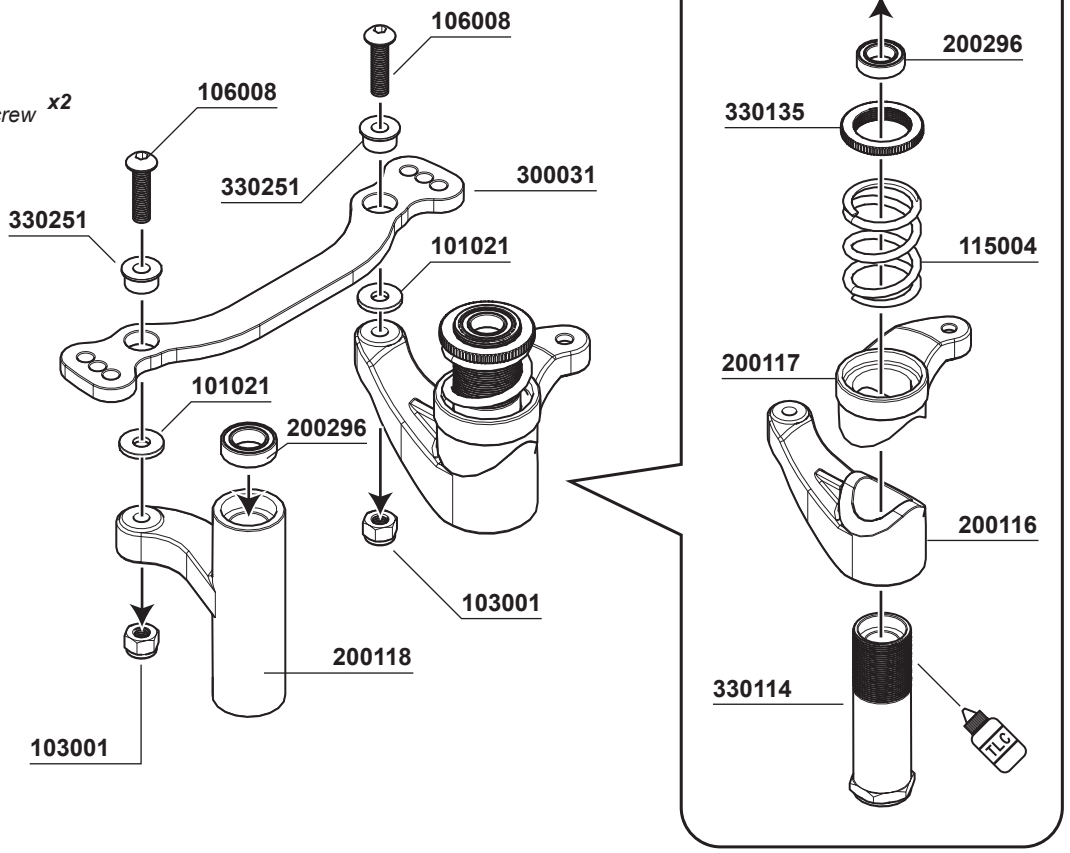

**106002**
*M3x10mm Hex Socket OH/TP Screw* ***x2***

**101019**
*SHIM 6.0x10.0x0.2mm* ***x1***

## 17

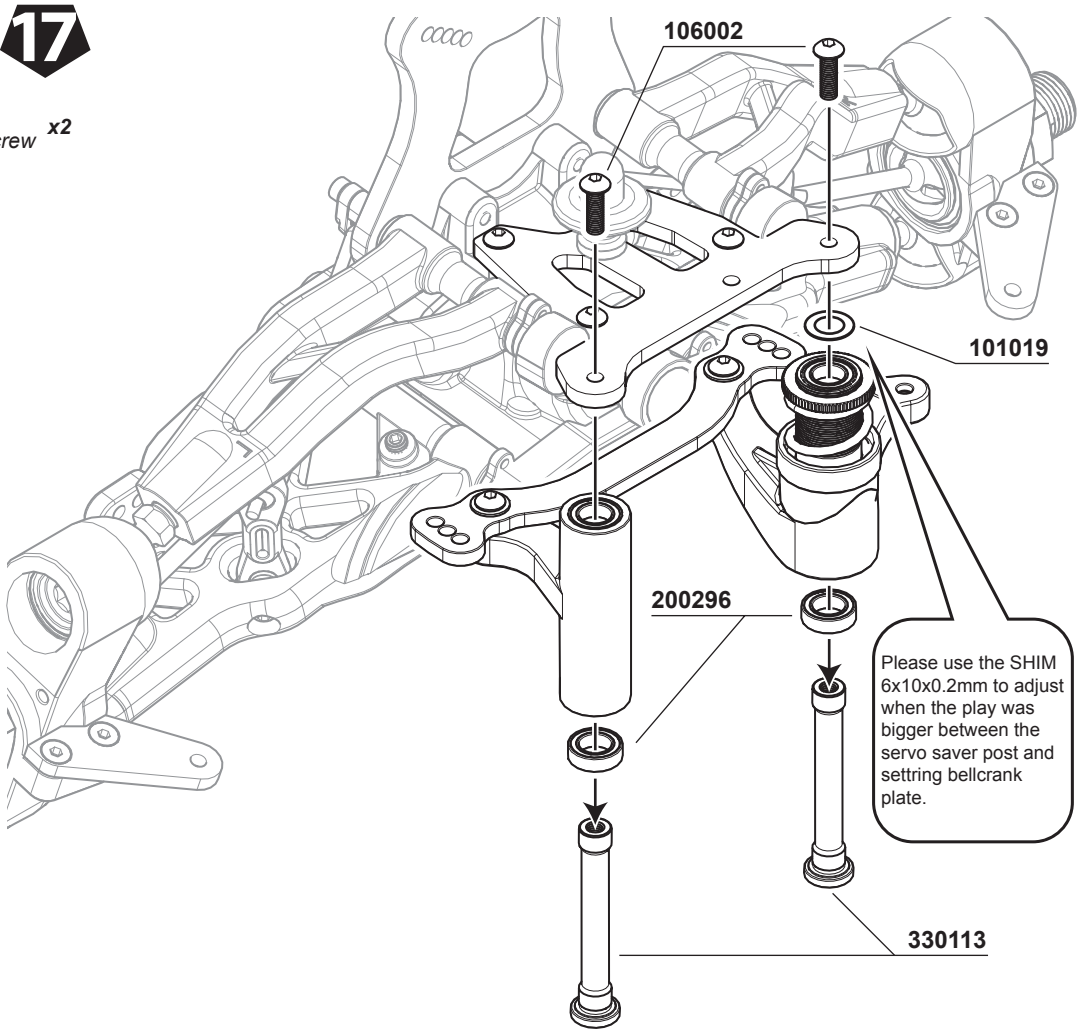

**104007**
*M4x8mm Set Screw* ***x2***

**106005**
*M3x15mm Hex Socket OH/TP Screw* ***x2***

## 18

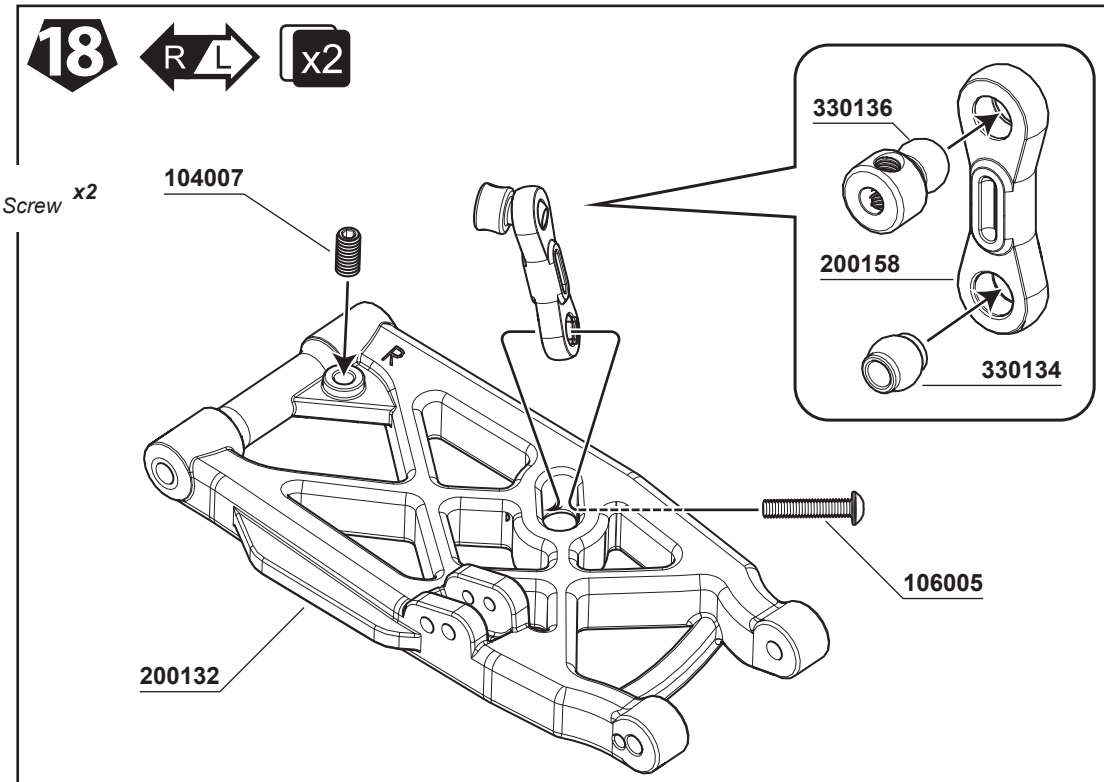


## 19

**106002**
*M3x10mm Hex Socket OH/TP Screw* ***x1***

**108015**
*M3x16mm FH/ST HEX Screw* ***x2***

**106008**
*M3x12mm Hex Socket OH/TP Screw* ***x2***

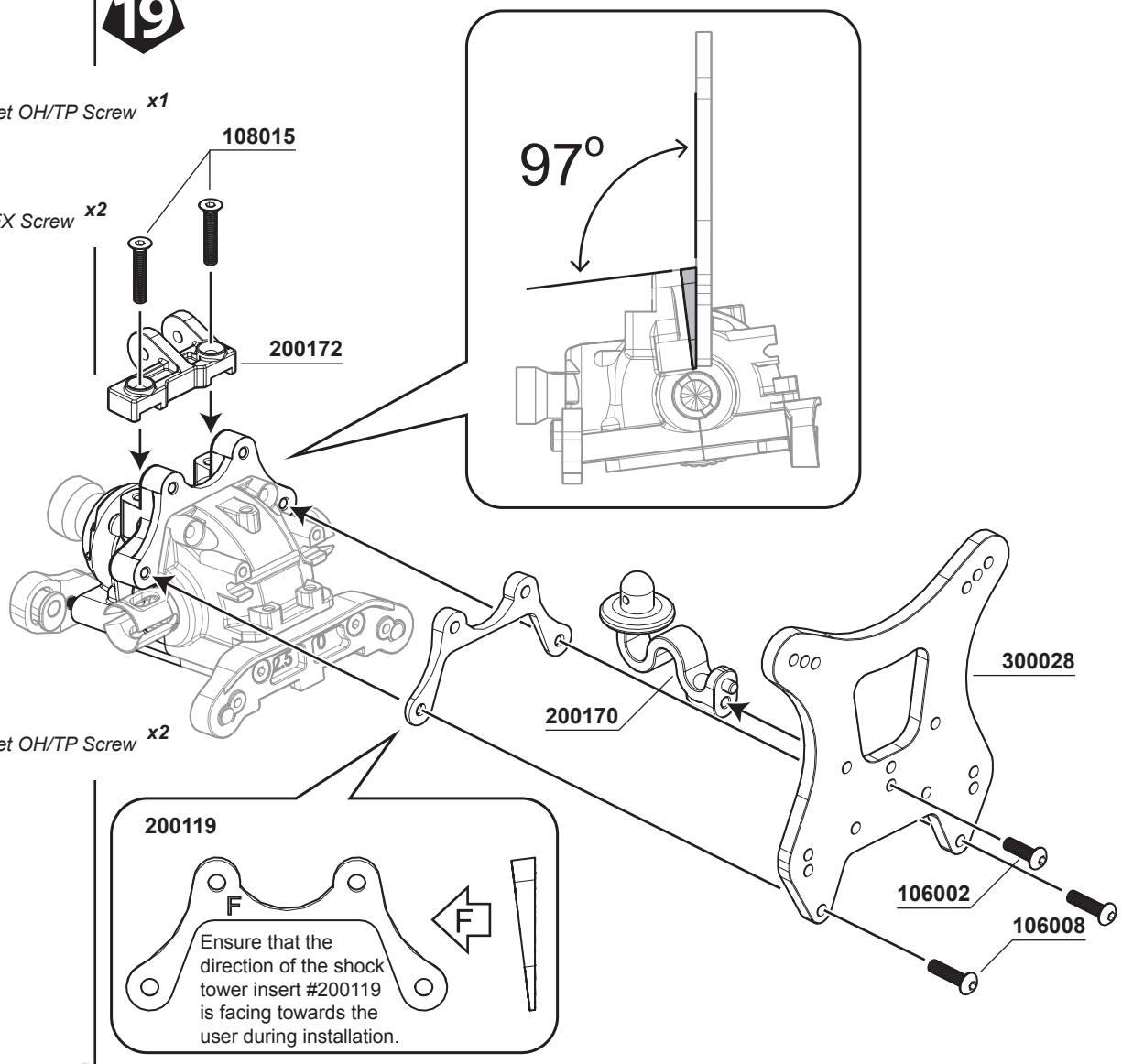

## 20

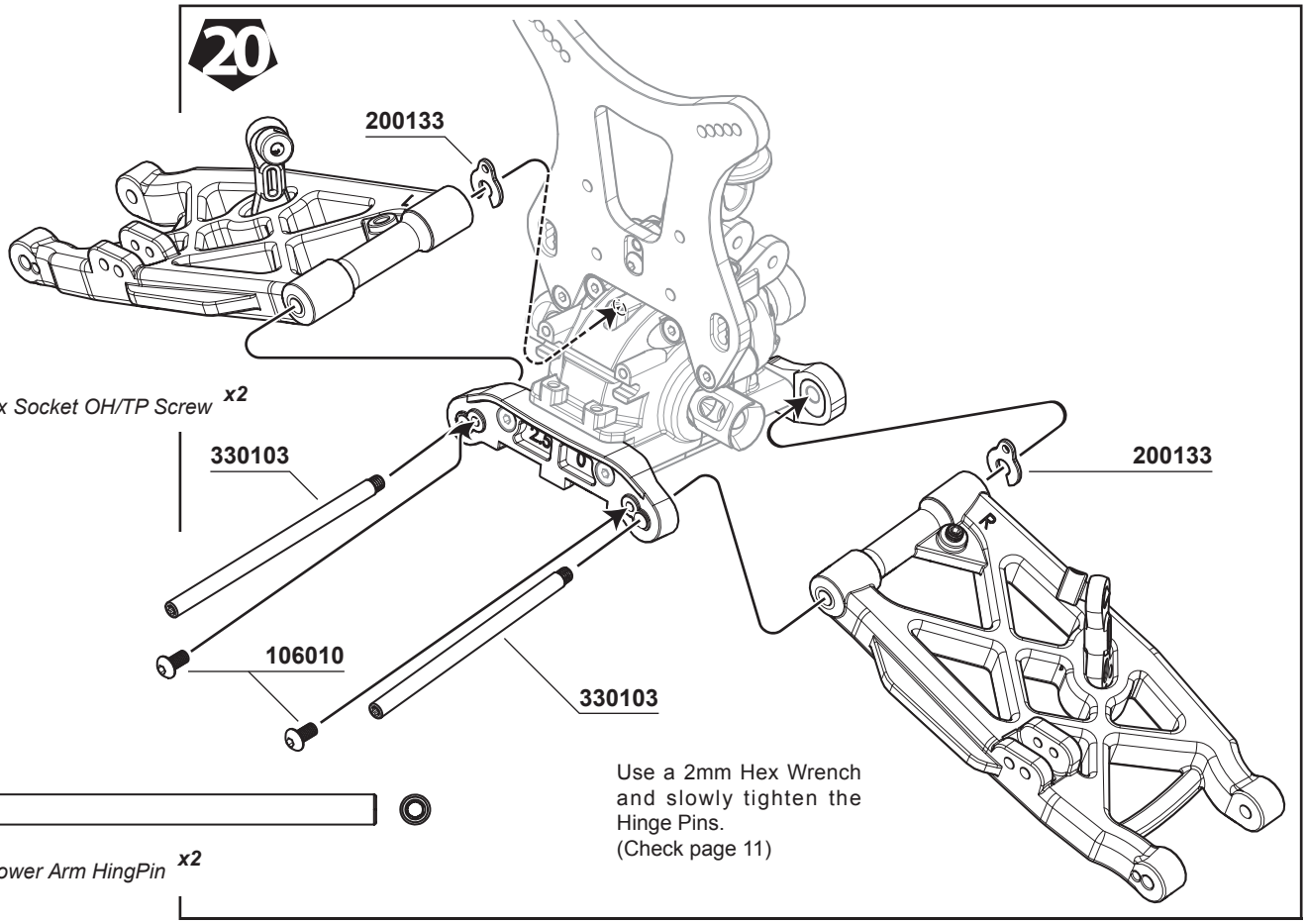


**106010**
*M3x6mm Hex Socket OH/TP Screw* ***x2***

**330103**
*Front/Rear Lower Arm HingPin* ***x2***

Use a 2mm Hex Wrench and slowly tighten the Hinge Pins.
(Check page 11)

## 21

**104004**
*M3x3mm Set Screw* ***x2***

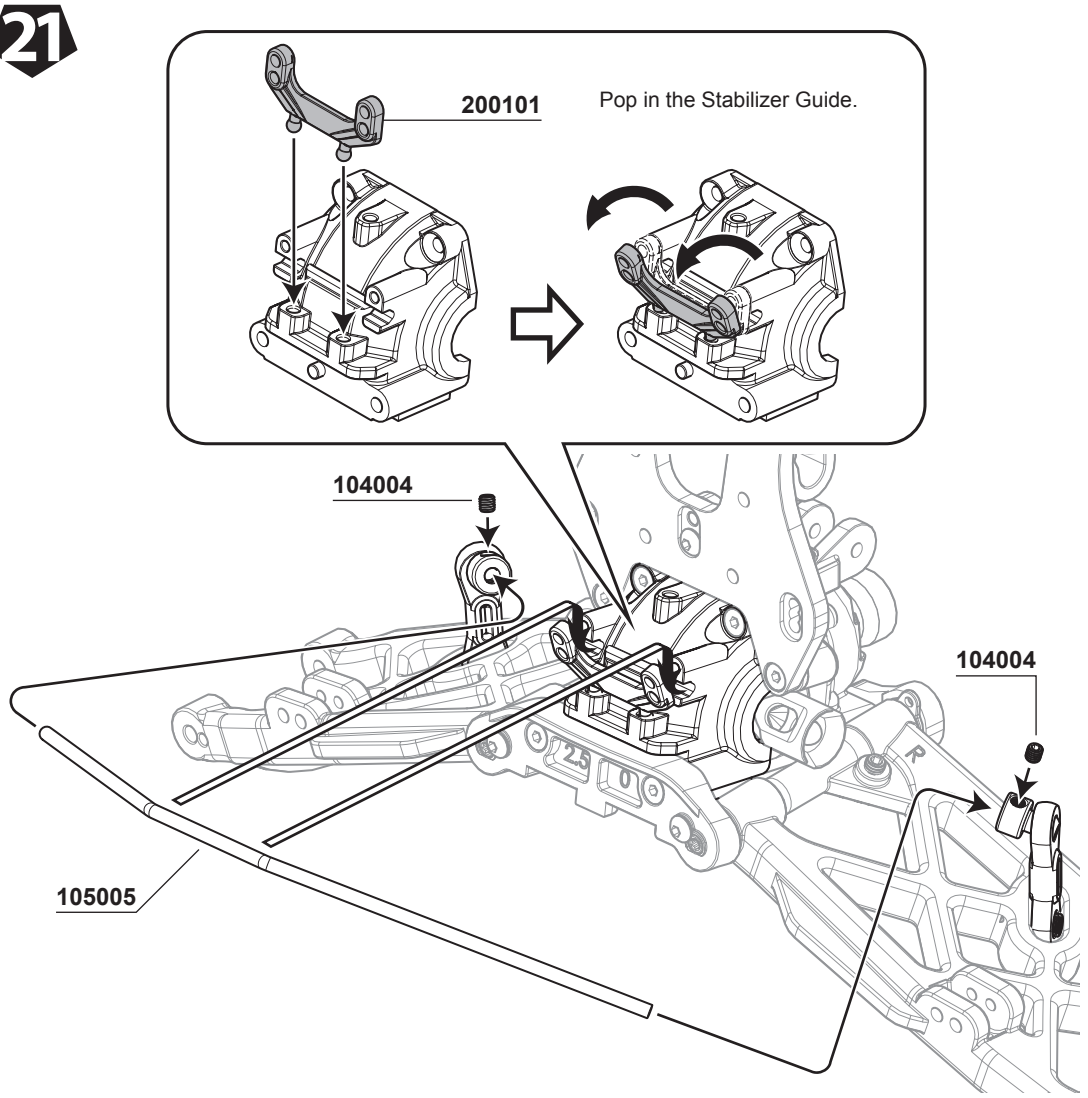

104005
*M3x4mm Set Screw* ***x2***

105004
*M2.6x6mm Cap Screw* ***x2***

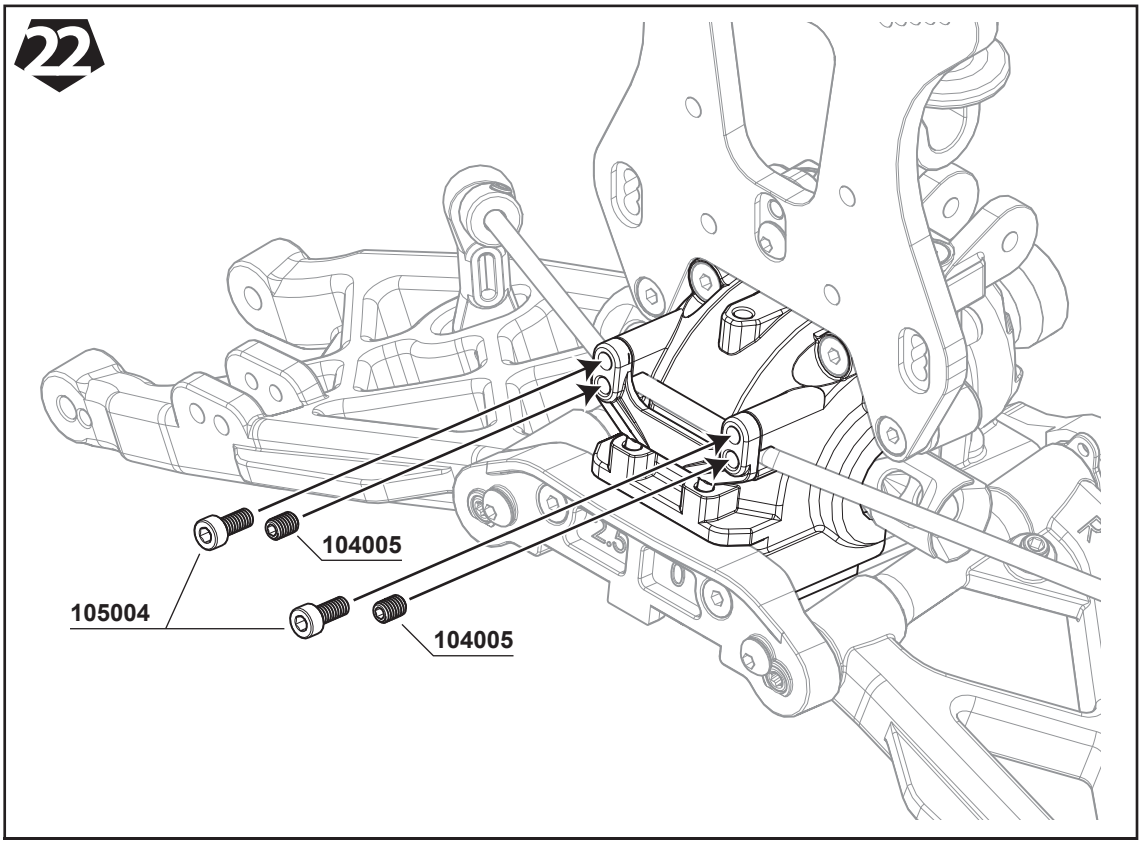


104001
*M5x4mm Set Screw* ***x2***

330124
*Pin M3.0x16.8mm* ***x2***

116006
*Ball Bearing 8x16x5mm* ***x2***

116012
*Ball Bearing 15x21x4mm* ***x2***

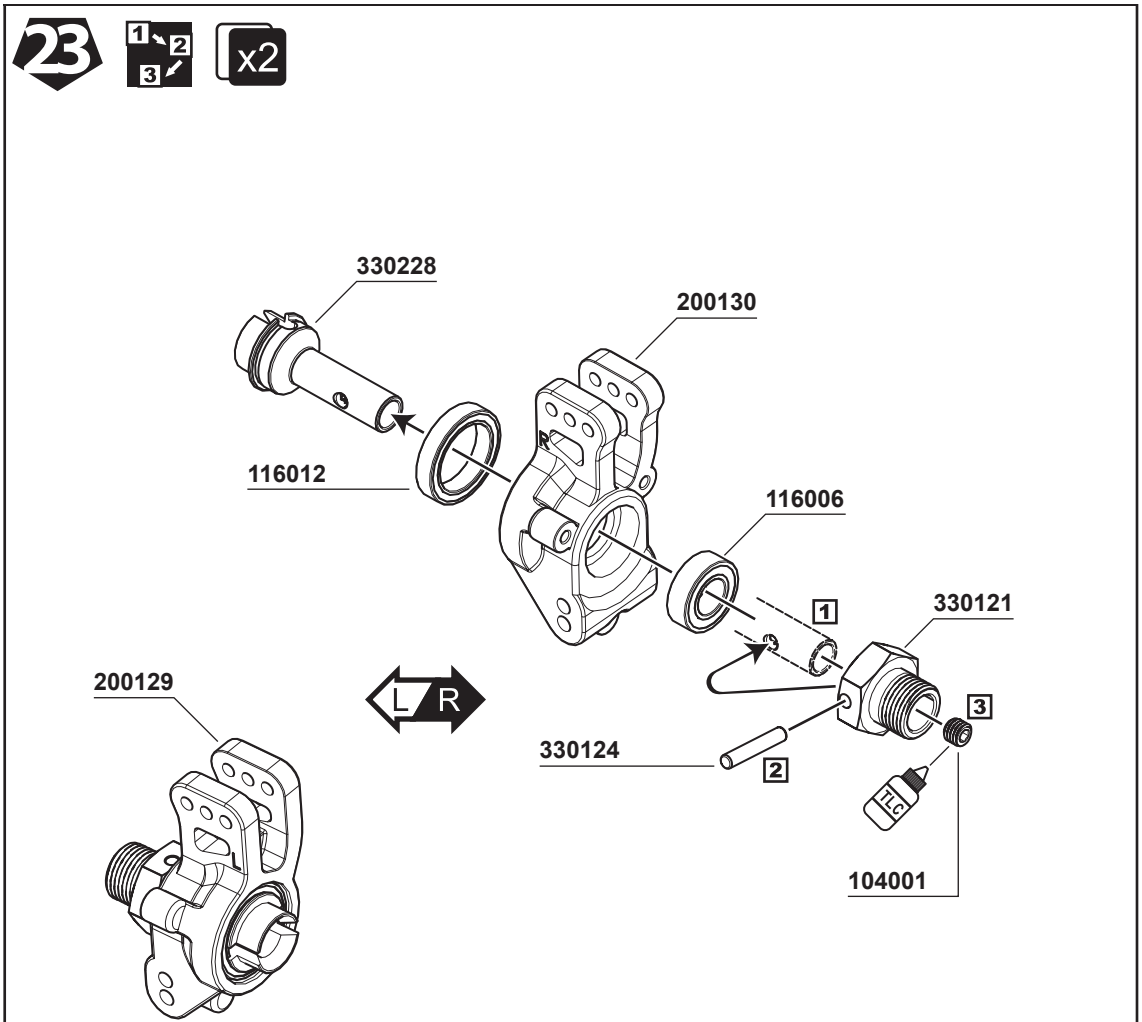

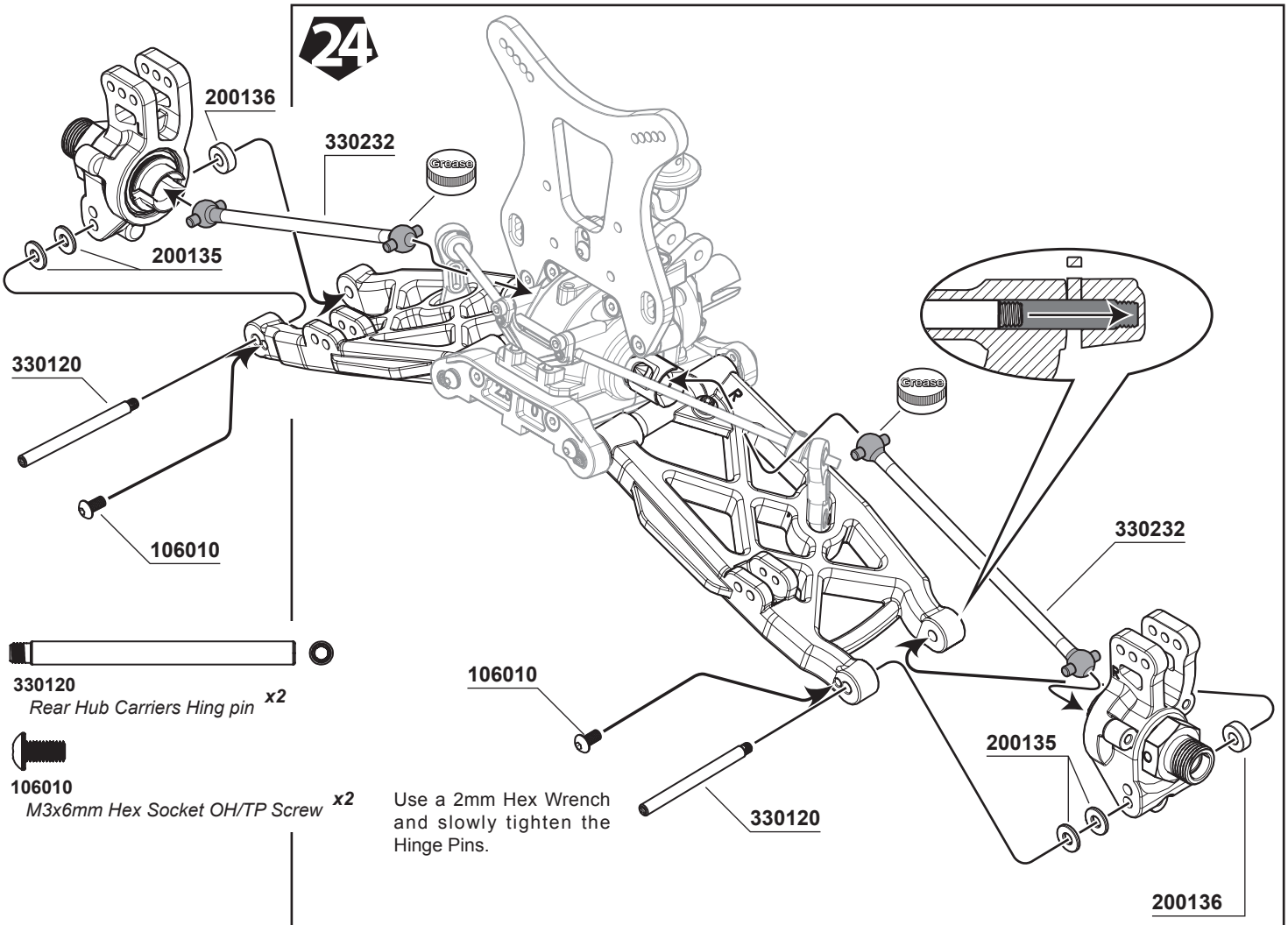


330120
*Rear Hub Carriers Hing pin* ***x2***

106010
*M3x6mm Hex Socket OH/TP Screw* ***x2***

Use a 2mm Hex Wrench and slowly tighten the Hinge Pins.

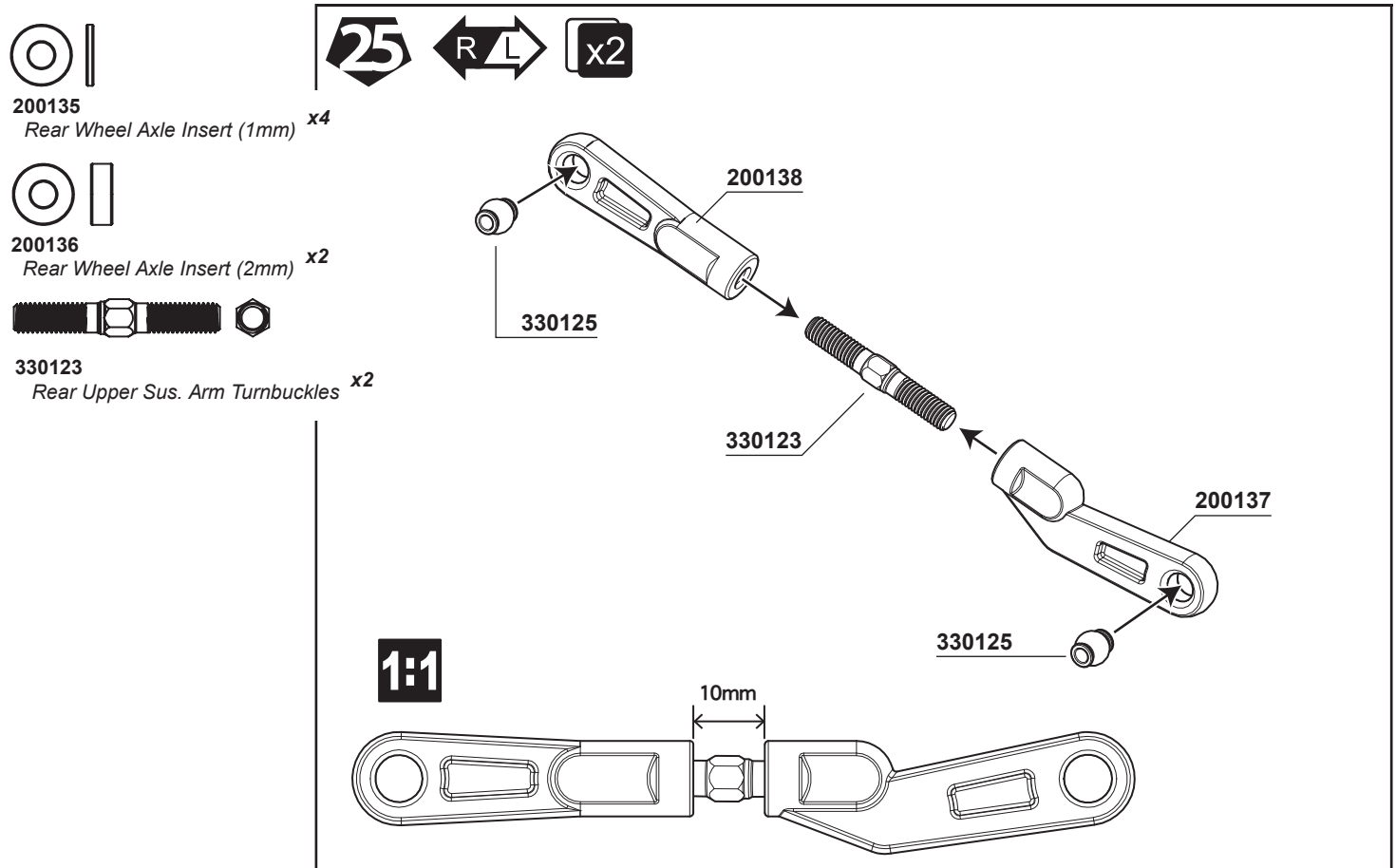


200135
*Rear Wheel Axle Insert (1mm)* ***x4***

200136
*Rear Wheel Axle Insert (2mm)* ***x2***

330123
*Rear Upper Sus. Arm Turnbuckles* ***x2***

**103001**
*M3 Nut Lock* ***x4***

**106003**
*M3x16mm Hex Socket OH/TP Screw* ***x2***

**105011**
*M3x23mm Cap Screw* ***x2***

## 26

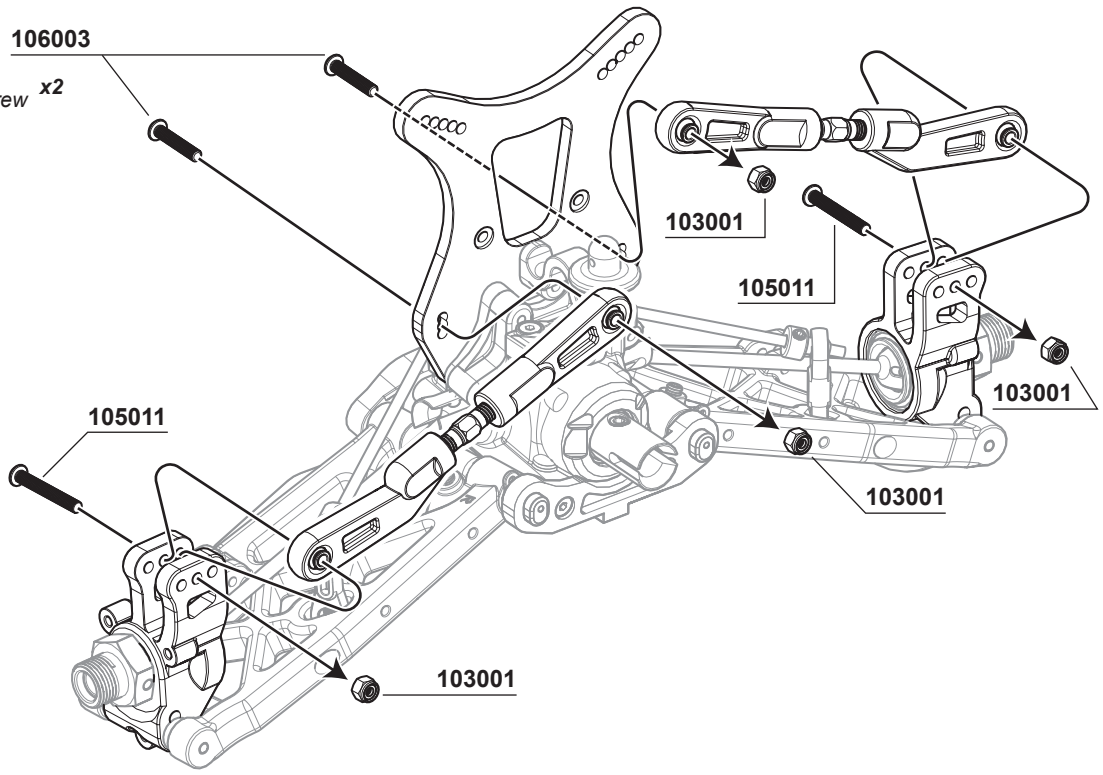

**108014**
*M3x3mm FH/ST HEX Screw* ***x4***

**106011**
*M3x4mm Hex Soket OH/TP Screw* ***x4***

## 27

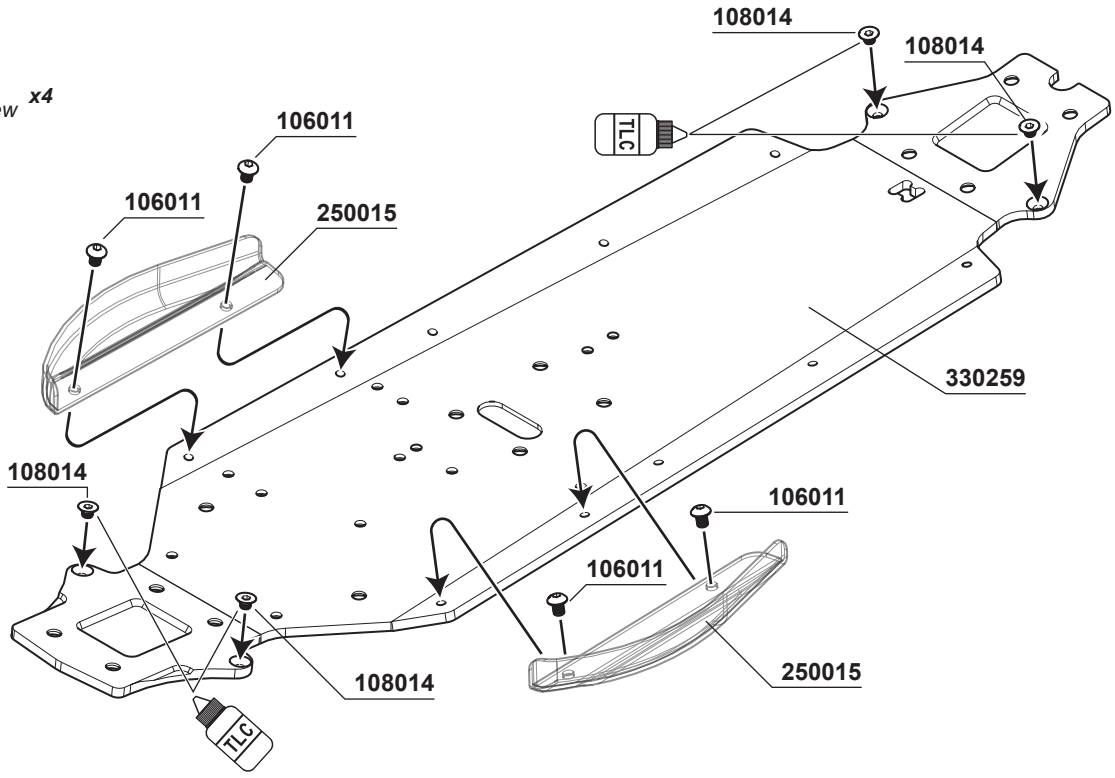

**106008**
*M3x12mm Hex Soket OH/TP Screw* ***x1***

**108003**
*M3x10mm FH/ST HEX Screw* ***x2***

**108001**
*M3x12mm FH/ST HEX Screw* ***x2***

**108010**
*M4x10mm FH/ST HEX Screw* ***x2***

**108012**
*M4x16mm FH/ST HEX Screw* ***x2***

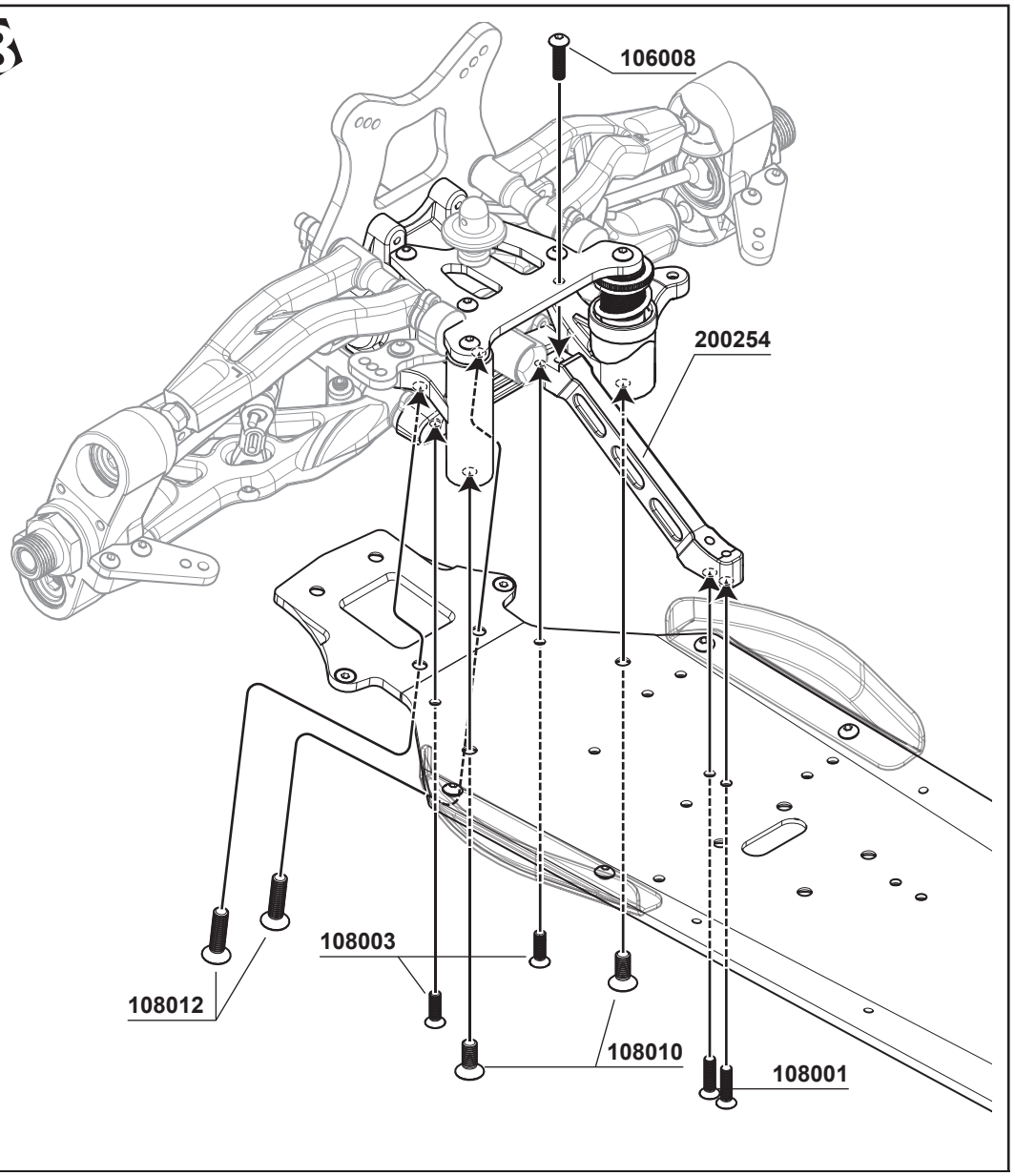


**108012**
*M4x16mm FH/ST HEX Screw* ***x2***

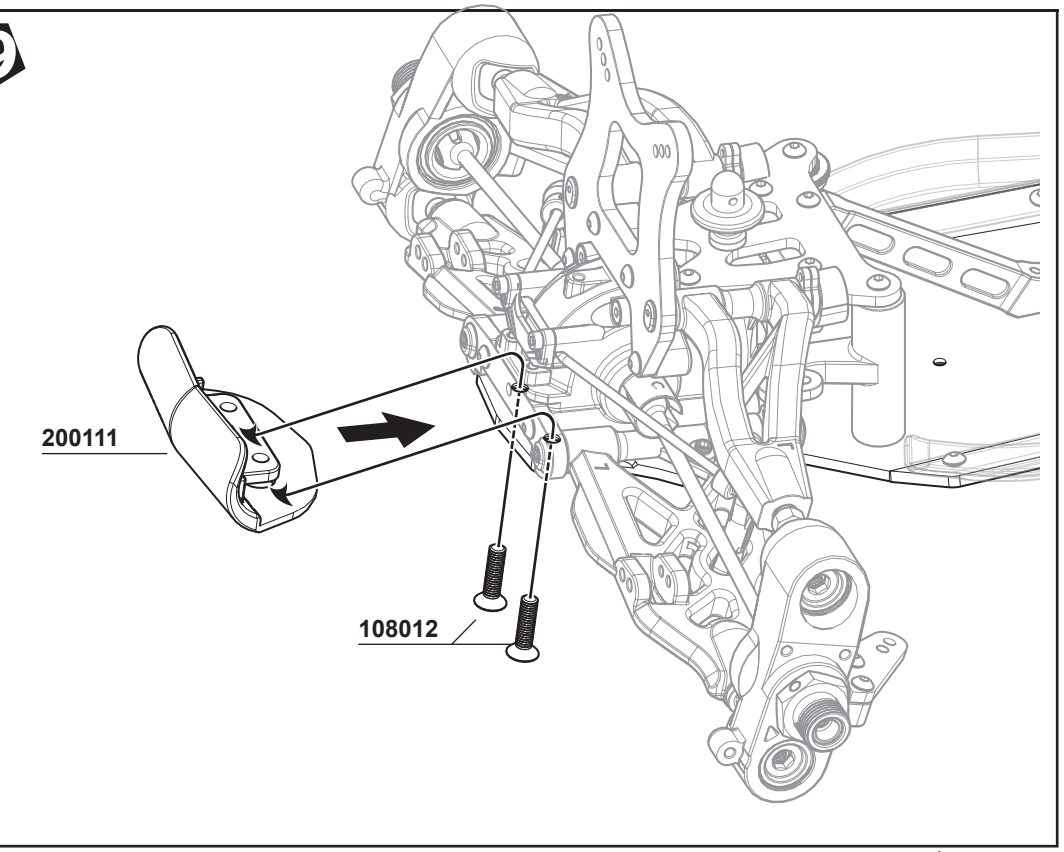

**104008**
*M4x4mm Set Screw* ***x1***

**106002**
*M3x10mm Hex Socket OH/TP Screw* ***x4***

**105012**
*M3x10mm Cap Screw* ***x2***

## 30

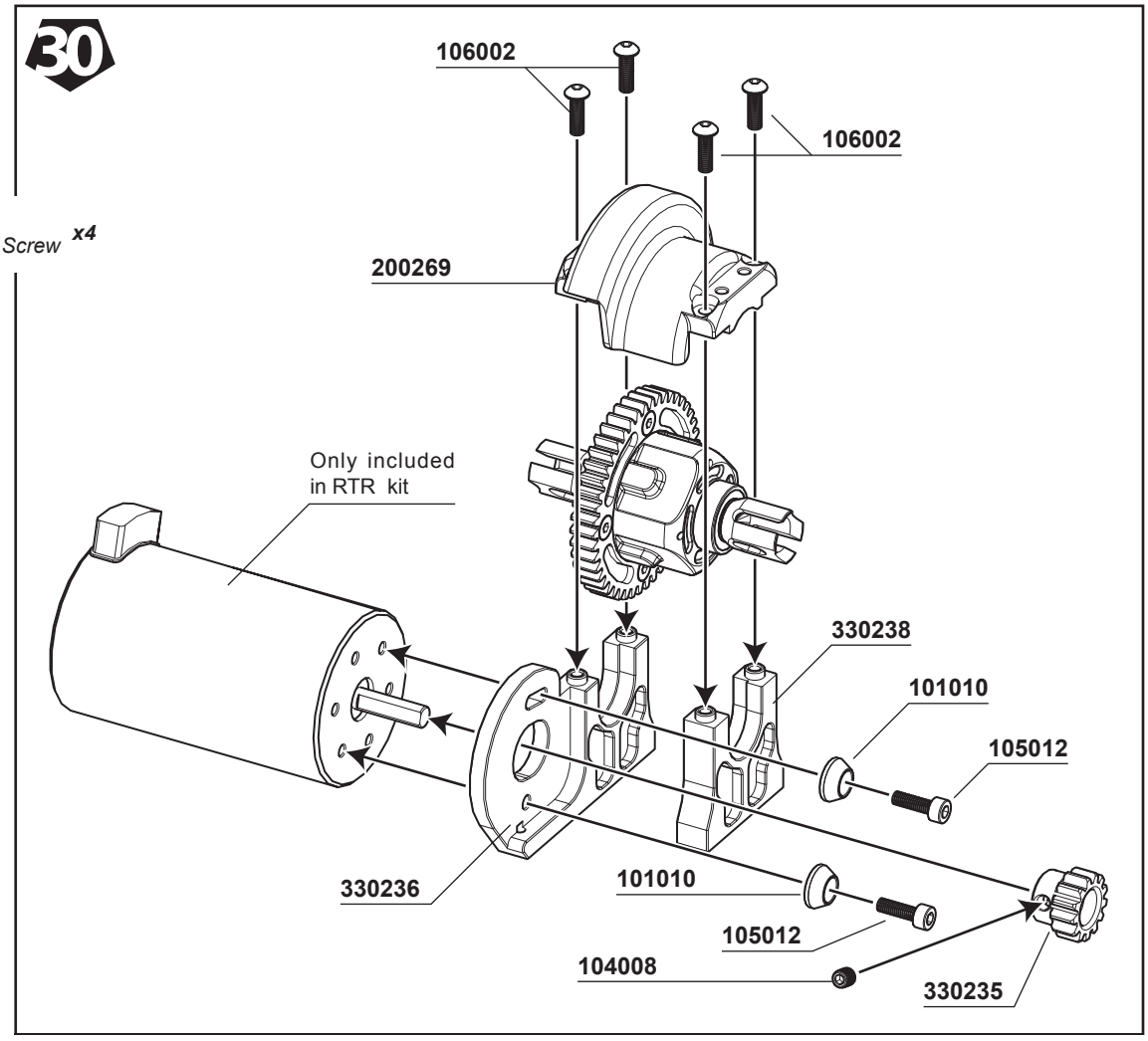


**108006**
*M3x8mm FH/ST HEX Screw* ***x1***

**108010**
*M4x10mm FH/ST HEX Screw* ***x4***

## 31

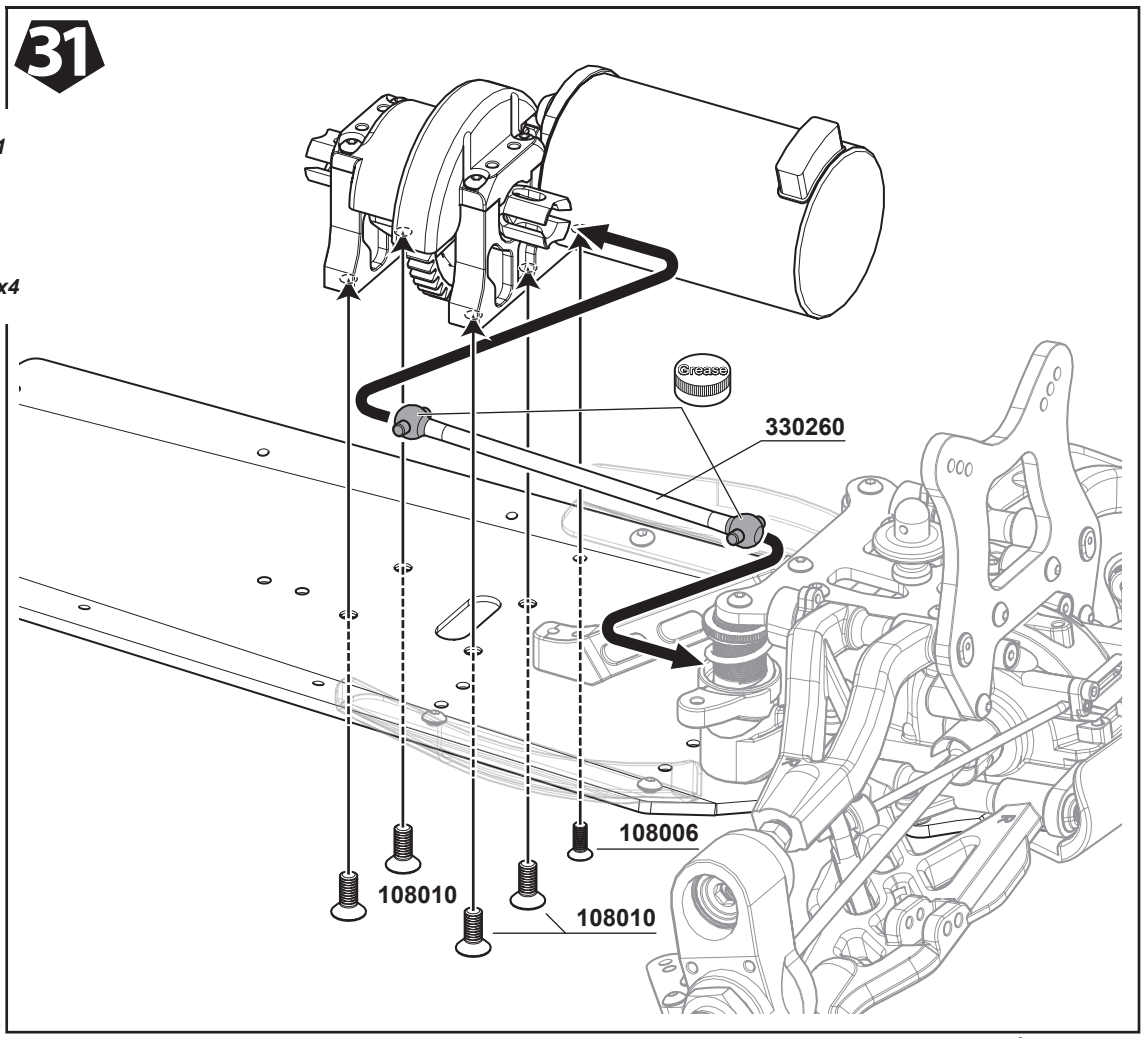

**103001**
*M3 Nut Lock* ***x1***

**108001**
*M3x12mm FH/ST HEX Screw* ***x2***

**108012**
*M4x16mm FH/ST HEX Screw* ***x4***

**106006**
*M3x20mm Hex Socket OH/TP Screw* ***x1***

## 32

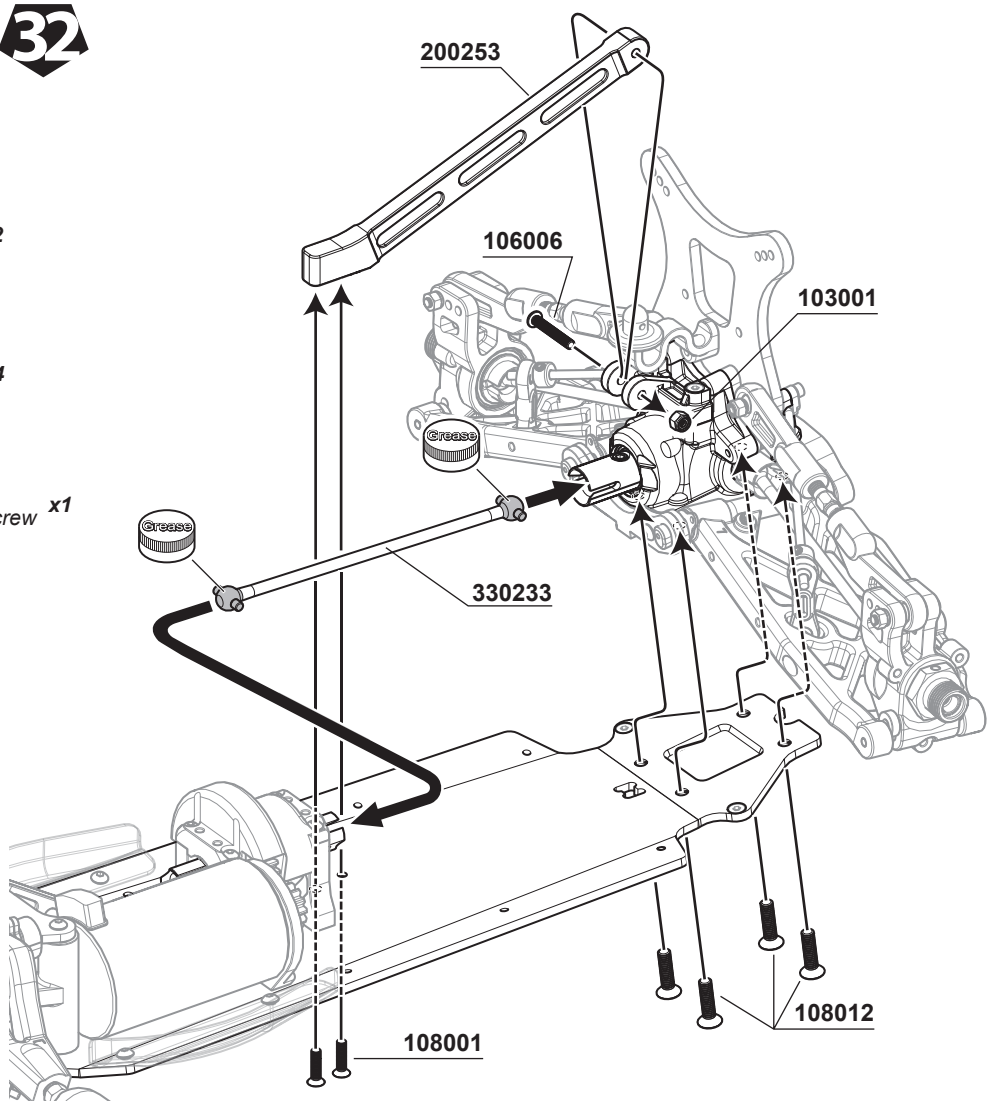


## 33

L R x2

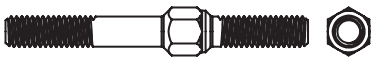

**330126**
*Steering Turnbuckle* ***x2***

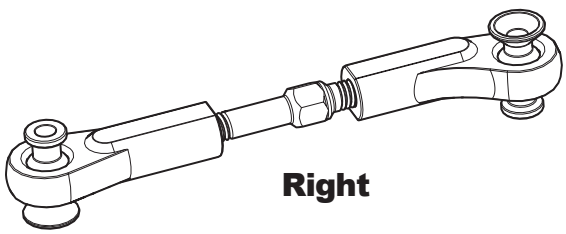


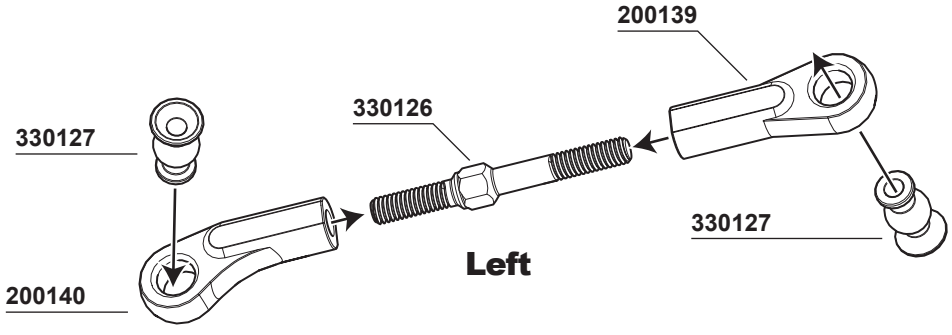


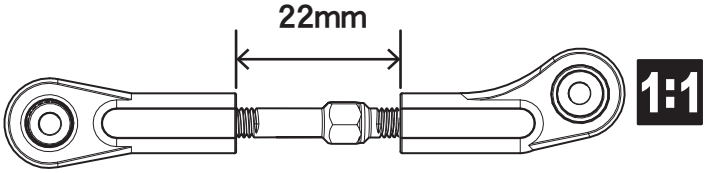

**103001**
*M3 Nut Lock* ***x4***

**108009**
*M3x20mm FH/ST HEX Screw* ***x4***

34 L R x2

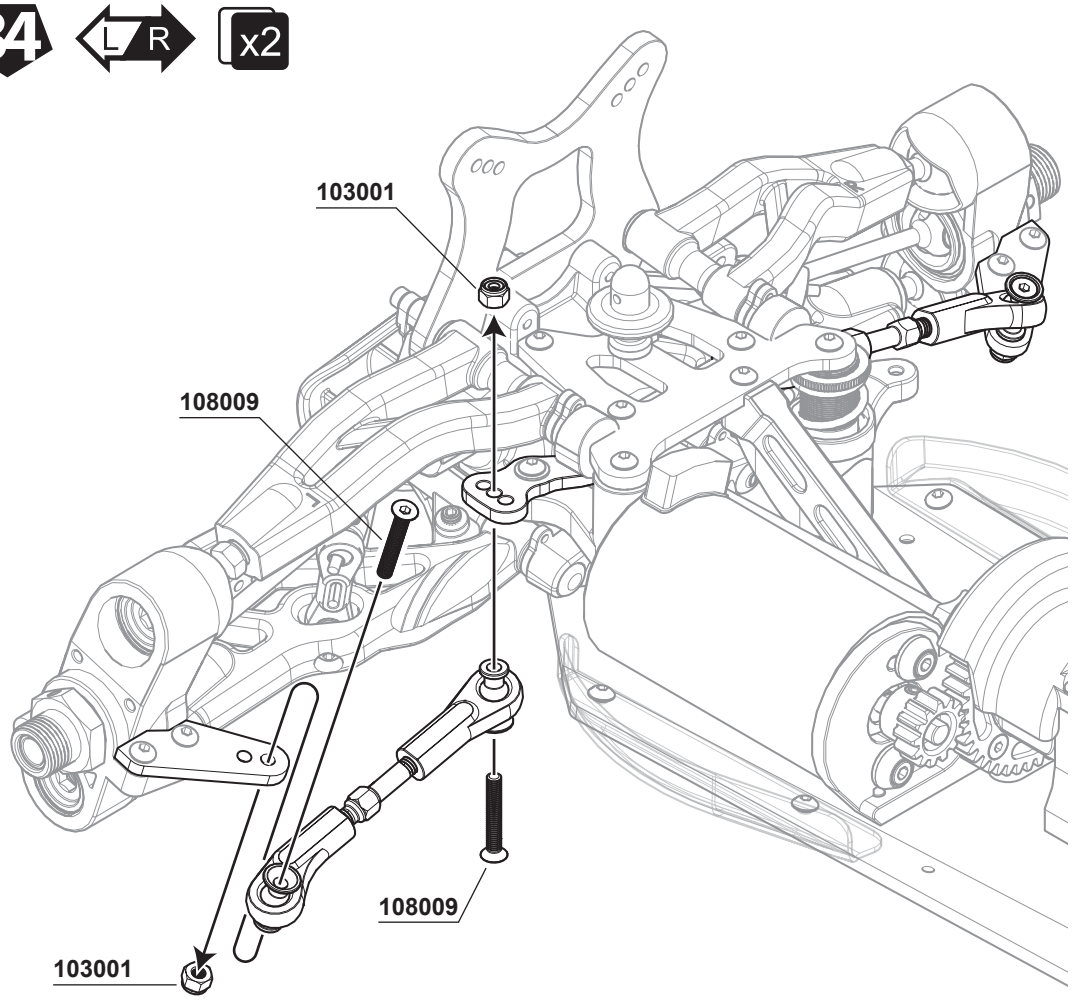


**108006**
*M3x8mm FH/ST HEX Screw* ***x4***

35

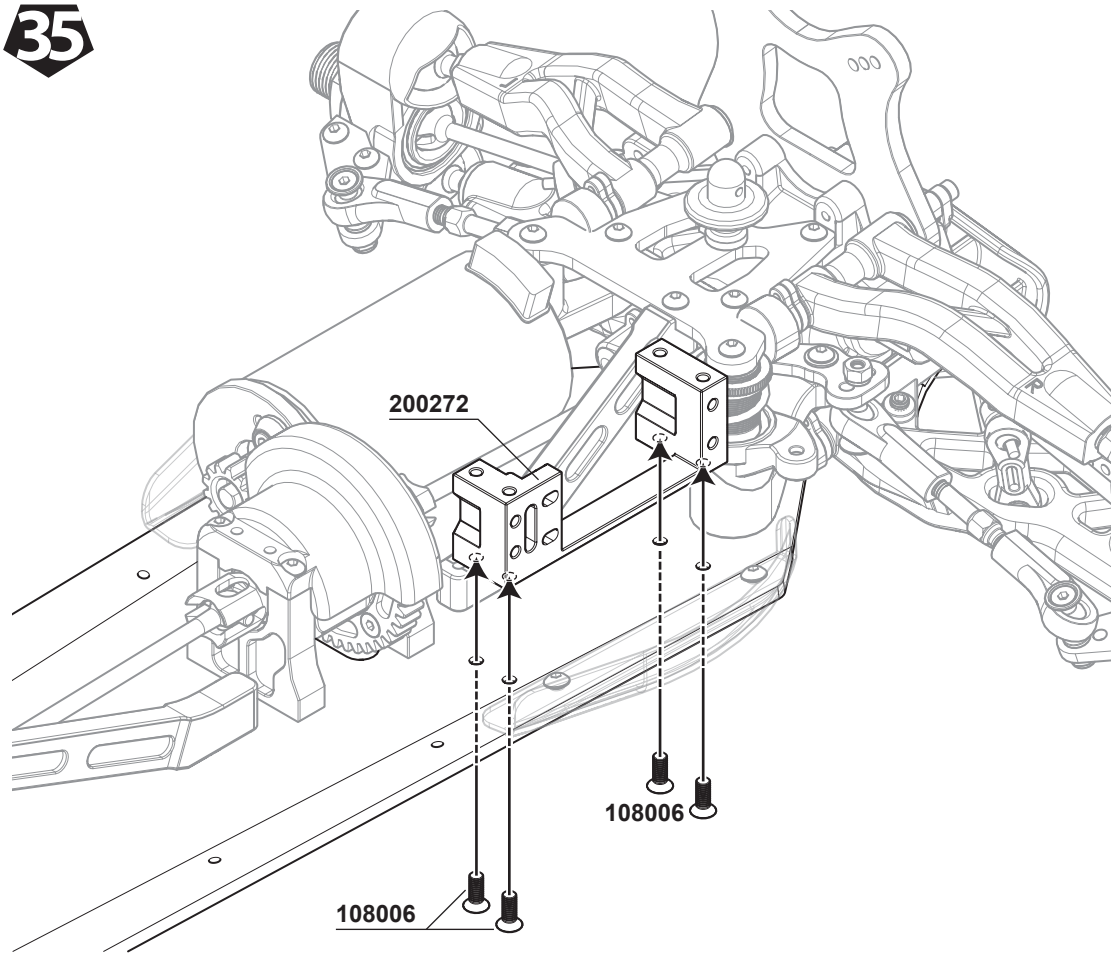

**106011**
*M3x4mm Hex Soket OH/TP Screw* ***x3***

**106010**
*M3x6mm Hex Socket OH/TP Screw* ***x2***

## 36

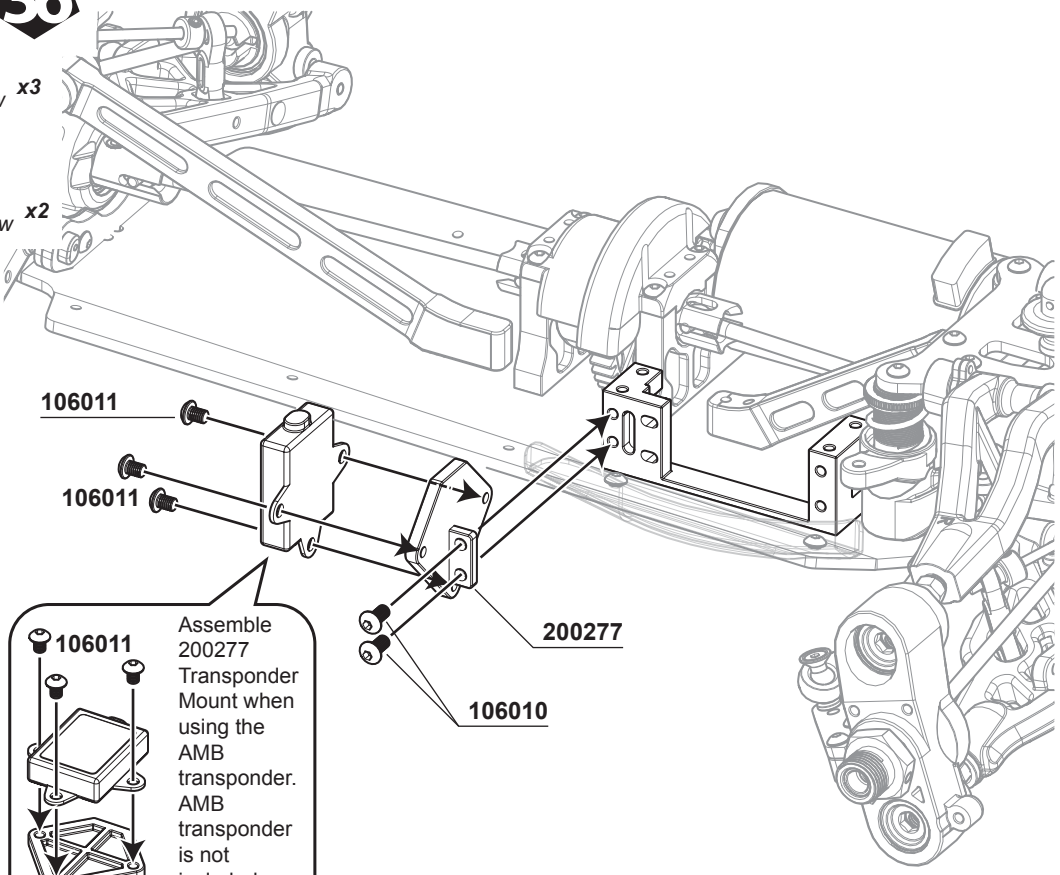


**106008**
*M3x12mm Hex Socket OH/TP Screw* ***x4***

## 37

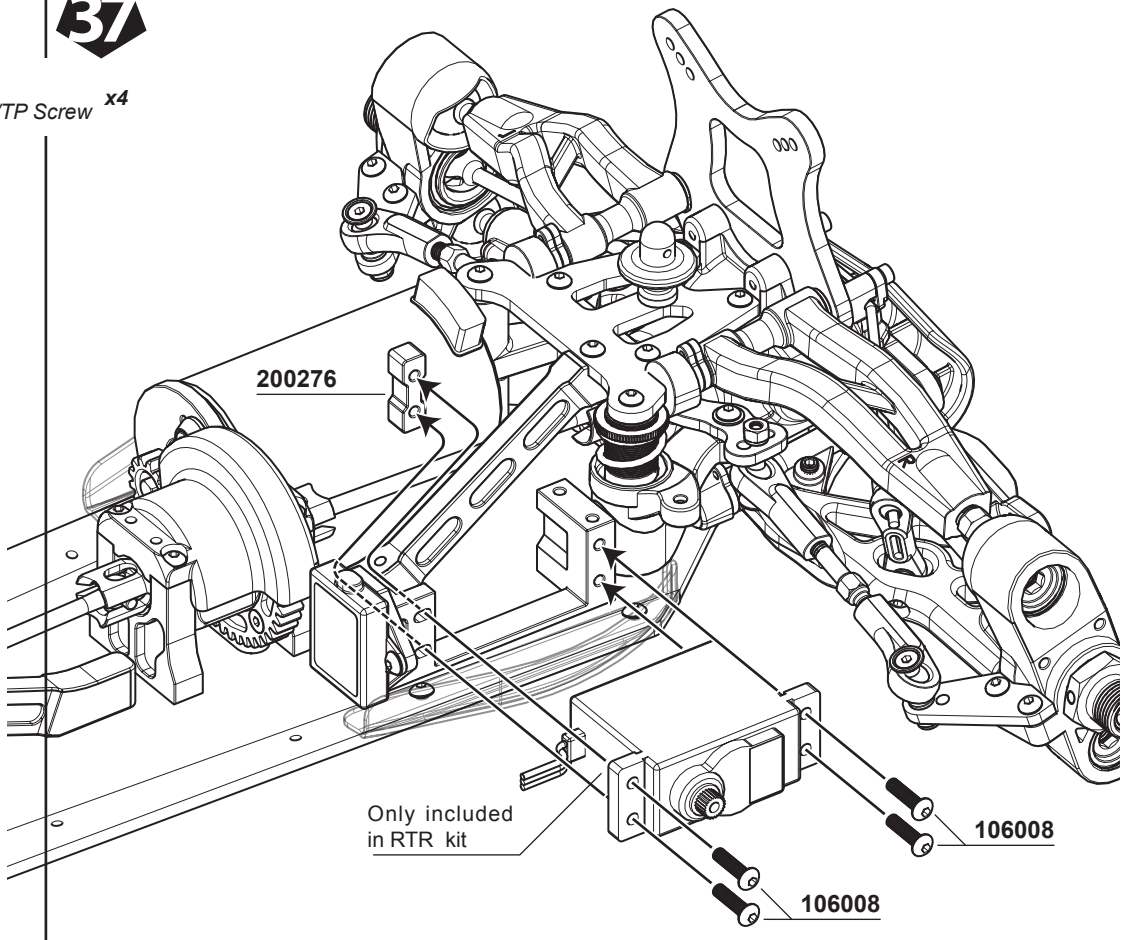

**103001**
*M3 Nut Lock* ***x1***

**330155**
*Steering Servo Turnbuckle (M3x30mm)* ***x1***

**106005**
*M3x15mm Hex Socket OH/TP Screw* ***x1***

**101014**
*M3 Pivot Ball Bushing* ***x1***

## 38

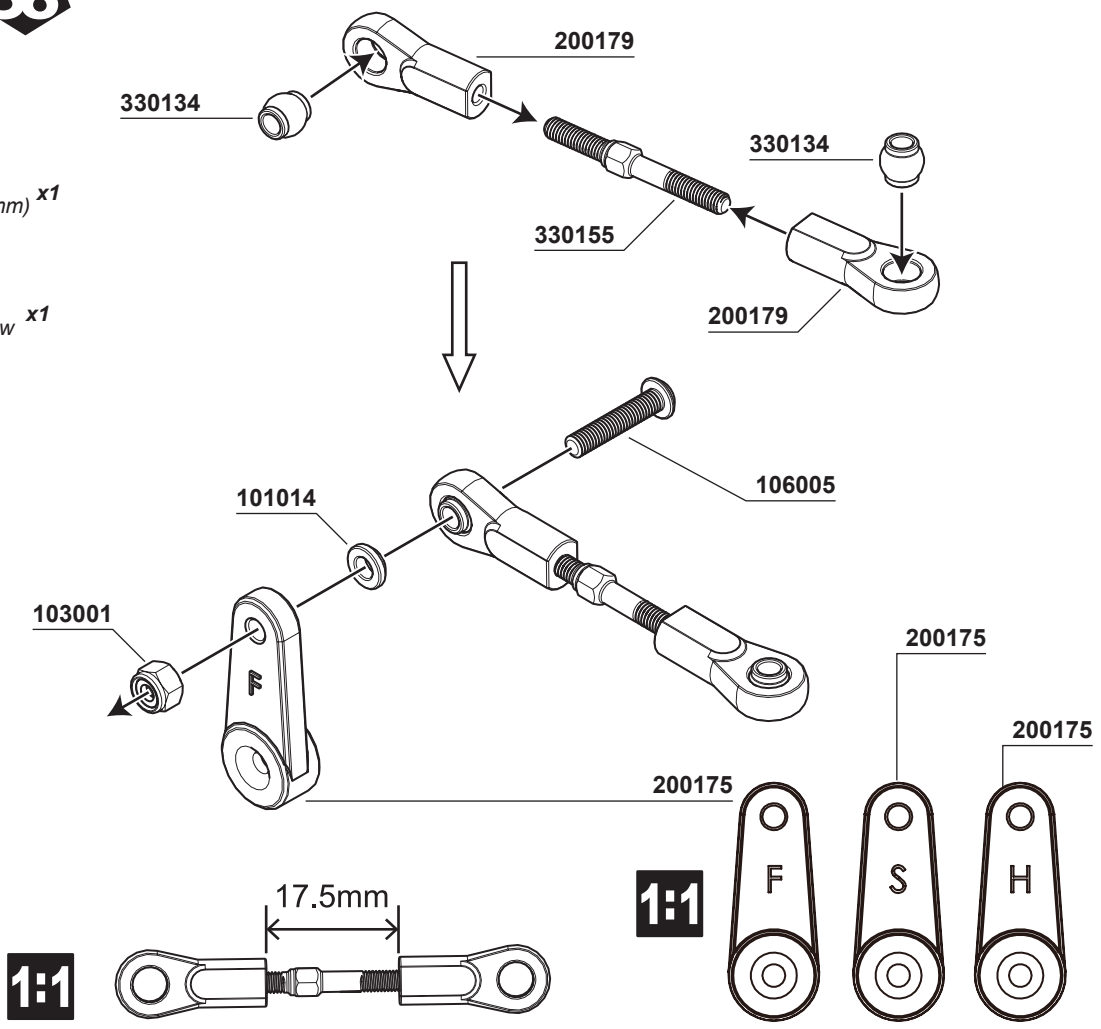


**103001**
*M3 Nut Lock* ***x1***

**108006**
*M3x8mm FH/ST HEX Screw* ***x1***

**106005**
*M3x15mm Hex Socket OH/TP Screw(HT)* ***x1***

## 39

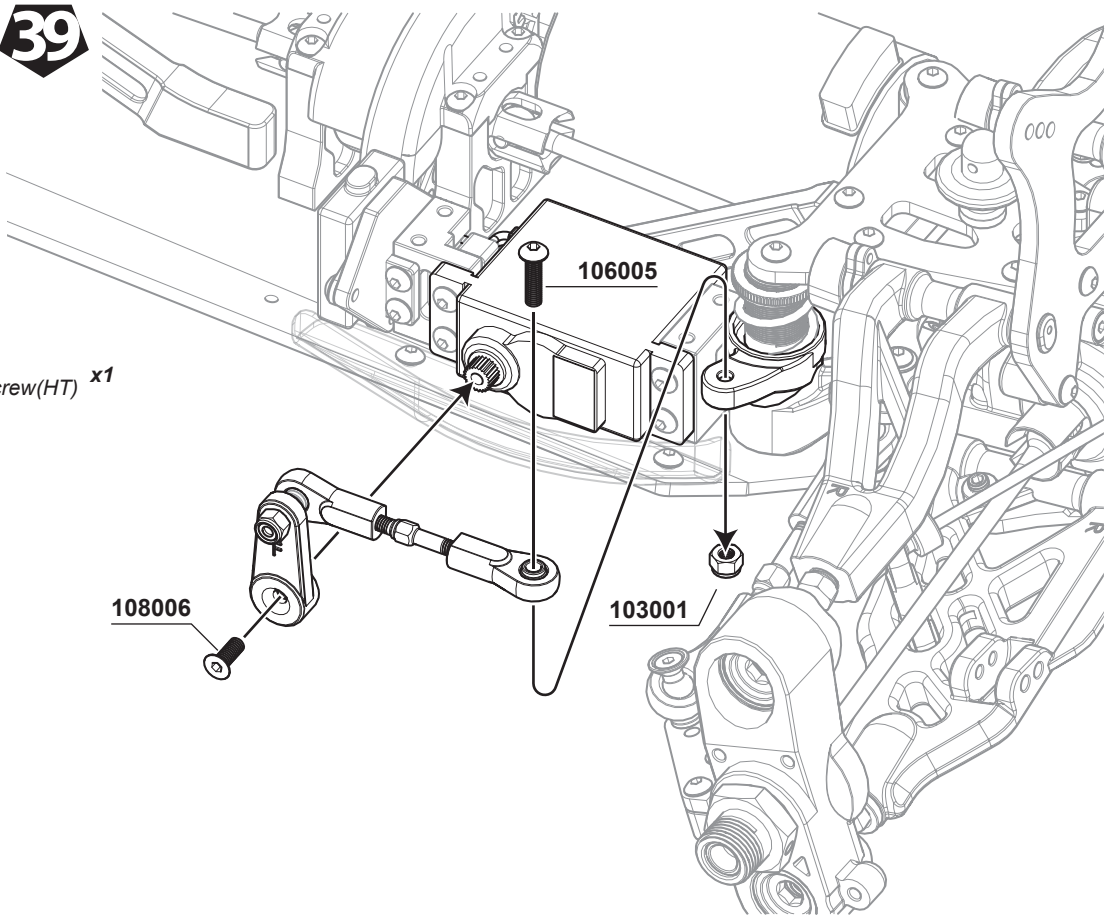

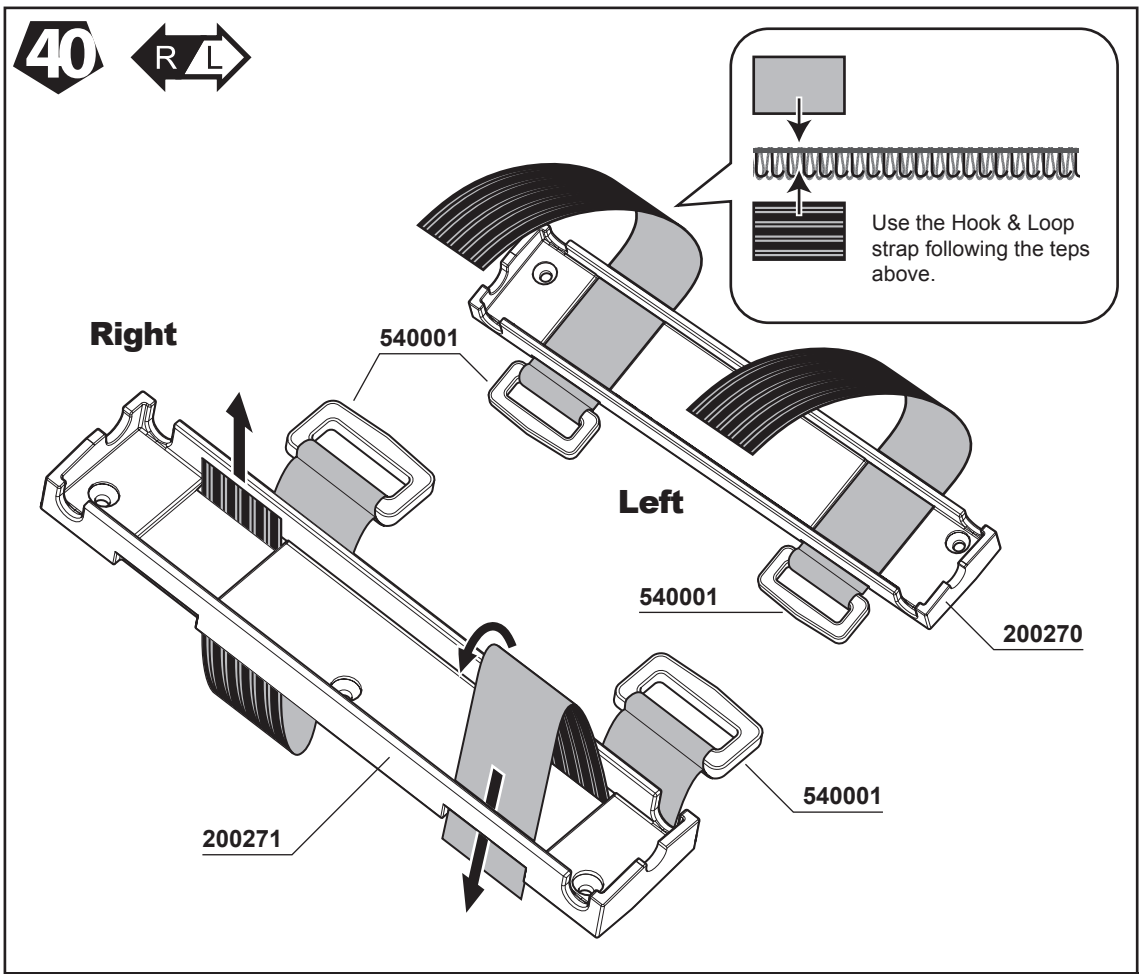

**108007**
*M3x6mm FH/ST HEX Screw* ***x6***

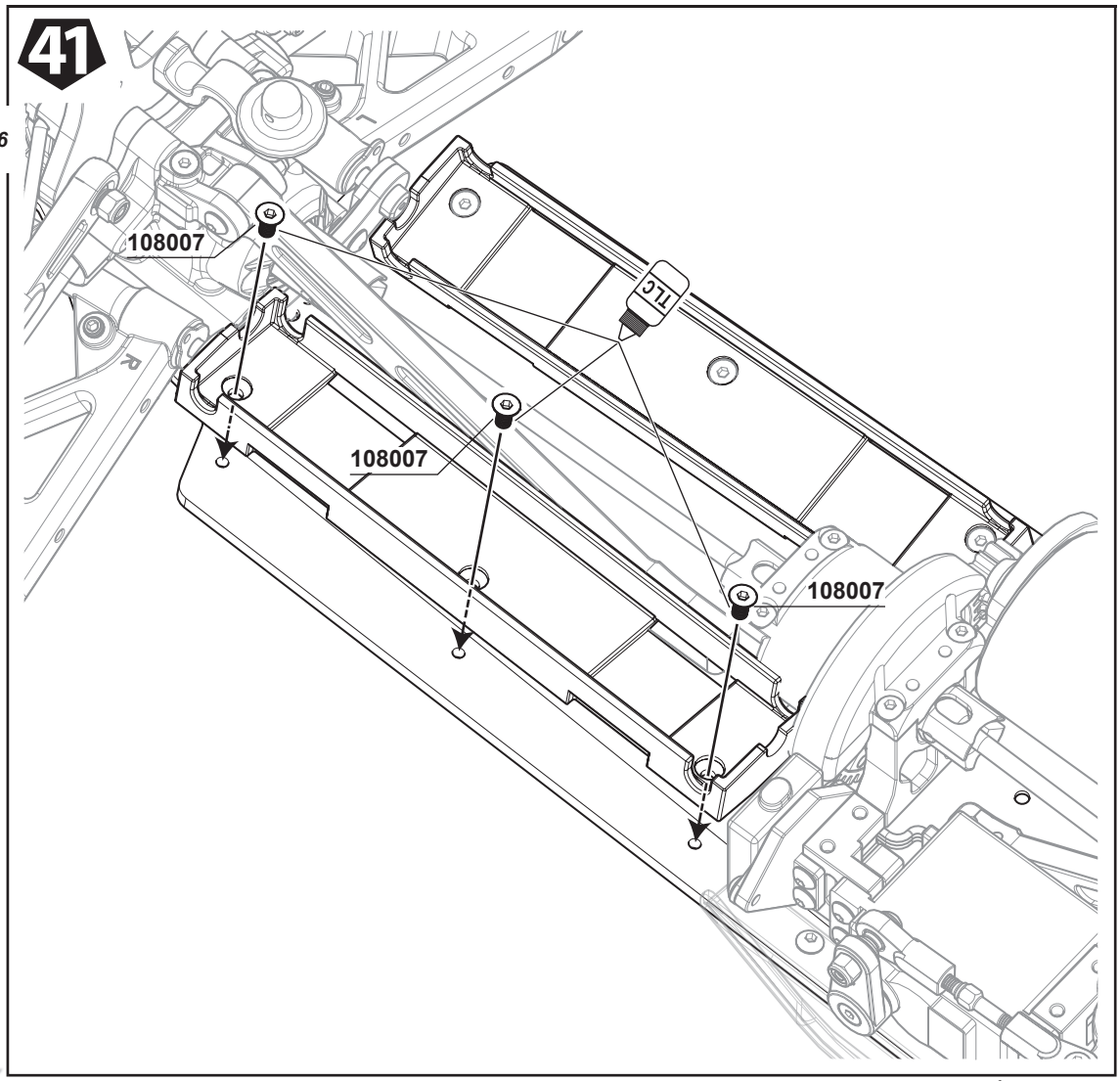

**108007**
*M3x6mm FH/ST HEX Screw* ***x4***

## 42

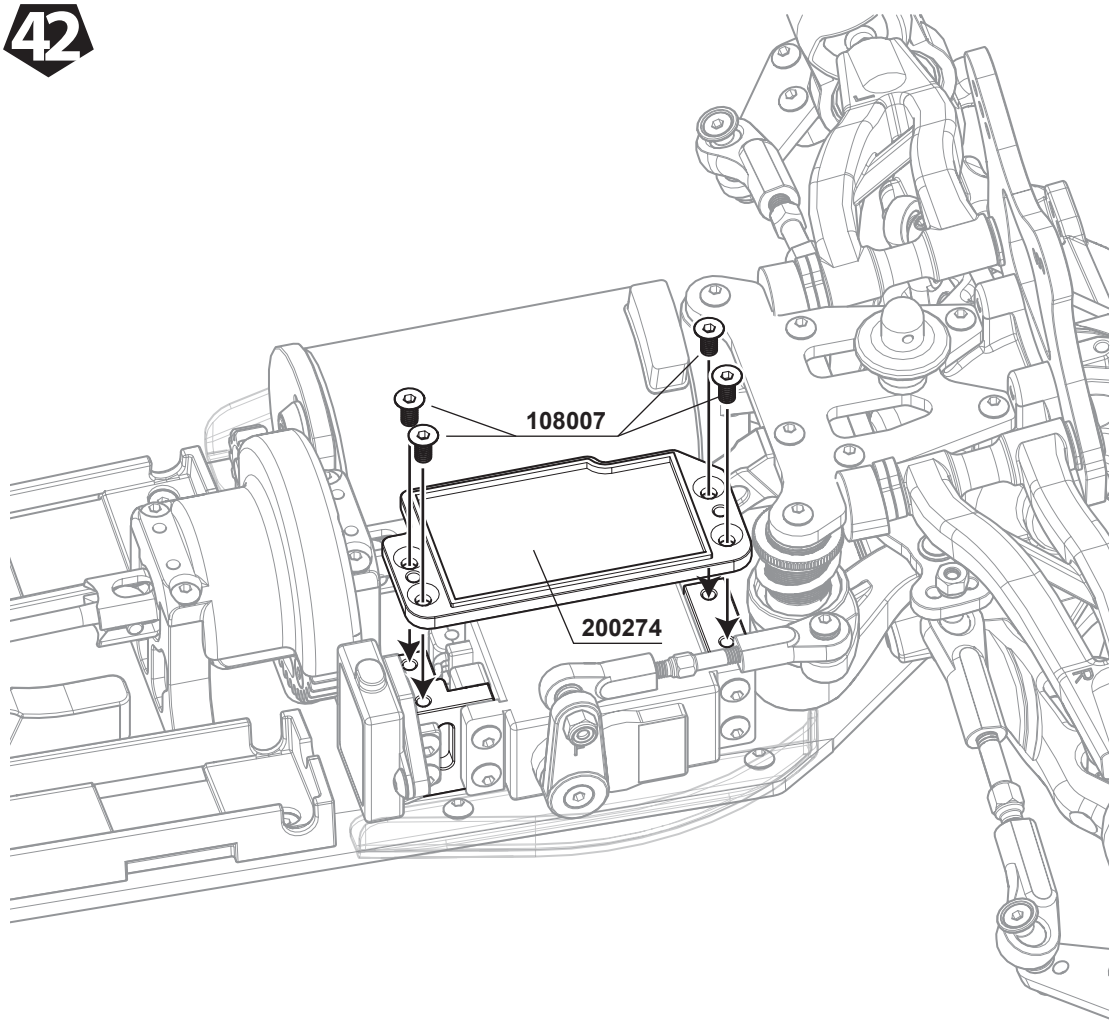

**106010**
*M3x6mm Hex Socket OH/TP Screw* ***x2***

## 43

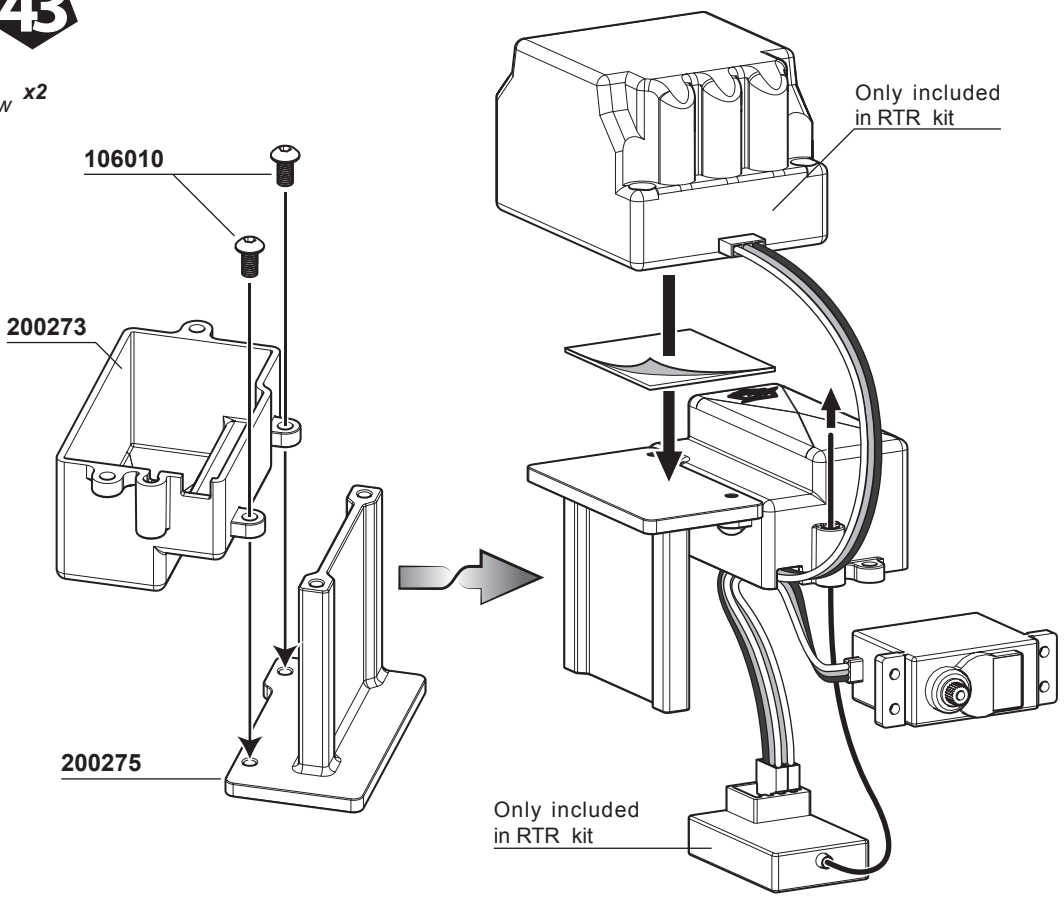

## 44

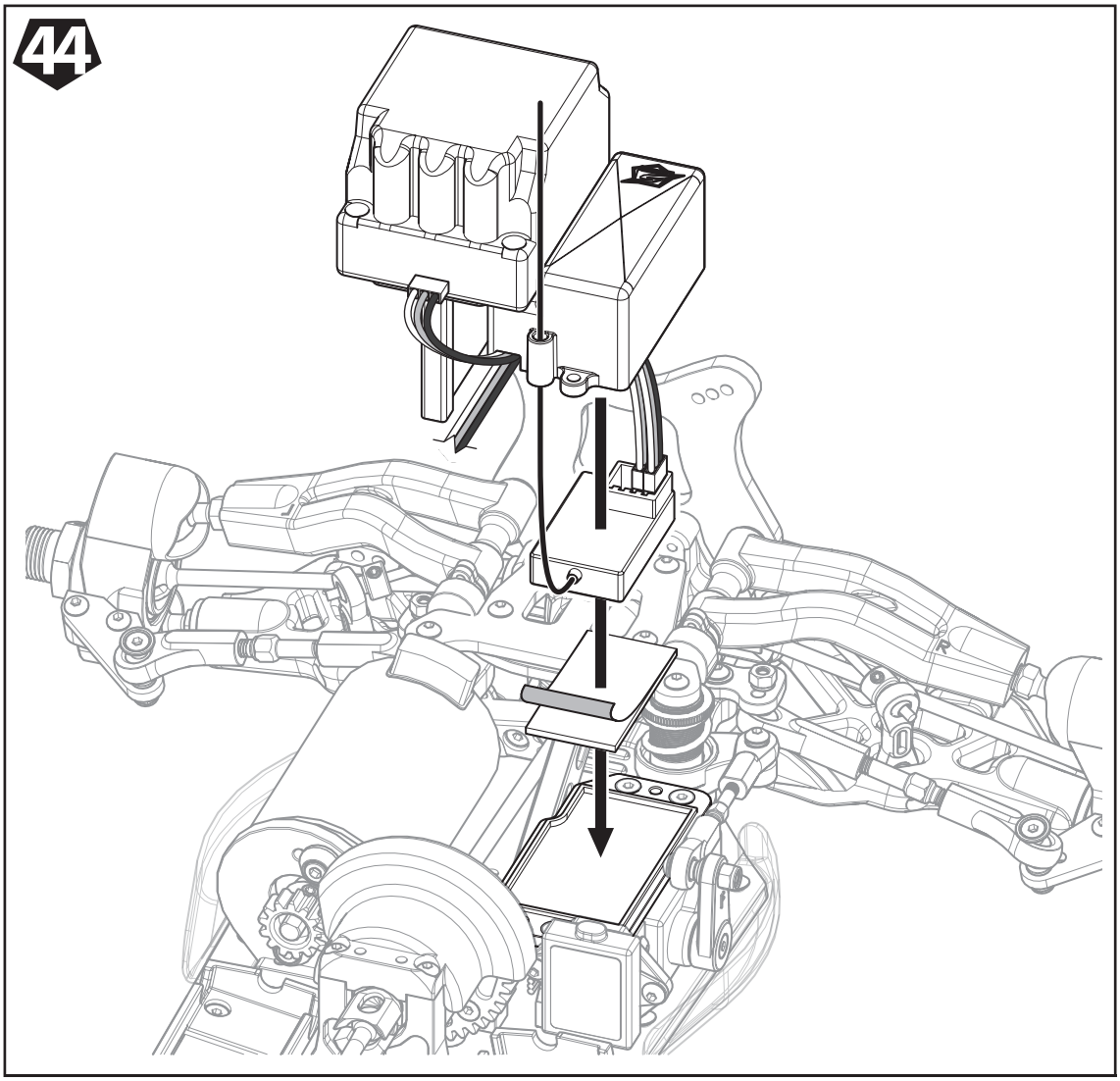

## 45

**106010**
*M3x6mm Hex Socket OH/TP Screw* ***x2***

**108006**
*M3x8mm FH/ST HEX Screw* ***x2***

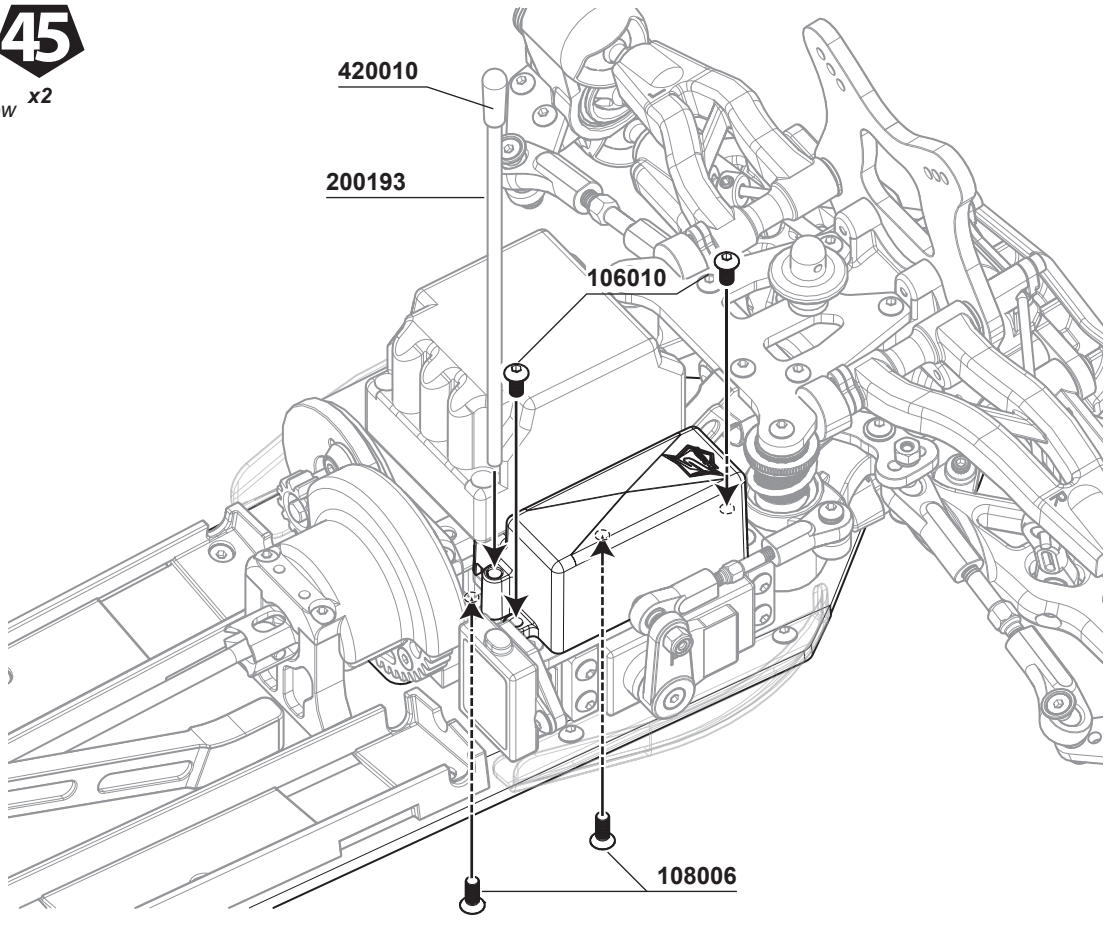

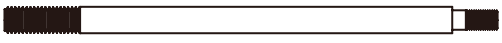

330254
*Shock Body (L)* ***x2***

330253
*Shock Shaft (S)* ***x2***

410029
*shock seal O-Ring* ***x8***

101011
*M2.6x6xT0.6mm* ***x4***

103004
*M2.5 Nut Lock* ***x4***

410028
*Shock Bladder* ***x4***

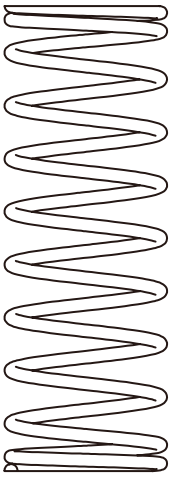

115049
*Shock Spring (S)* ***x2***

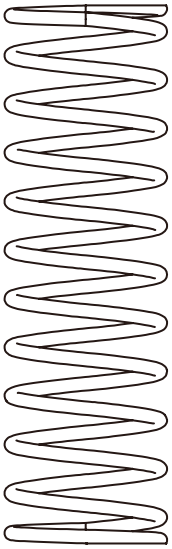

115050
*Shock Spring (L)* ***x2***

## 46 F/R x2 For Front x2 For Rear

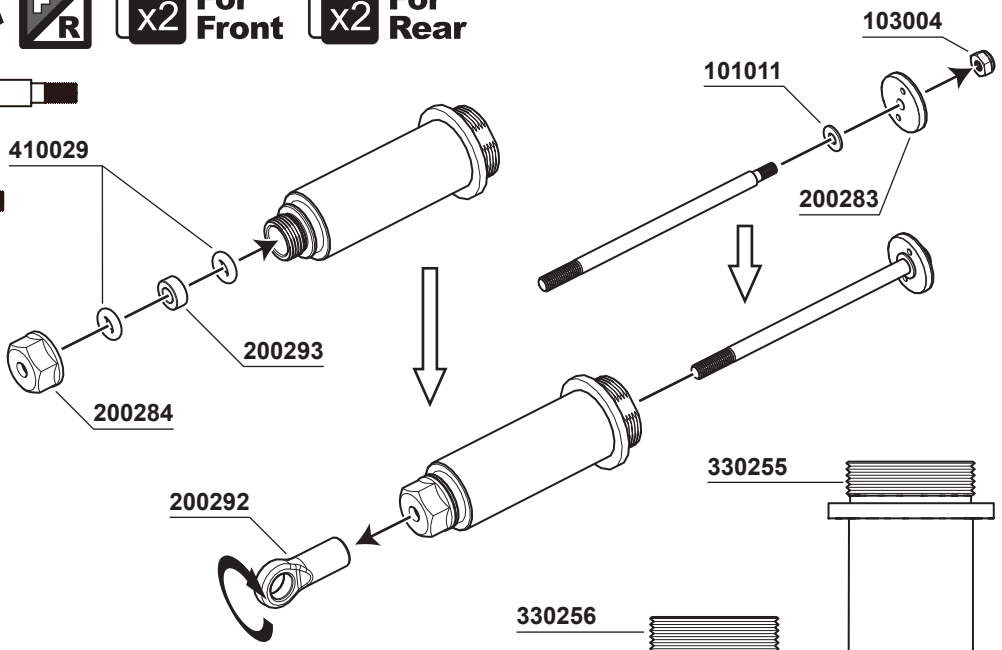


## 47

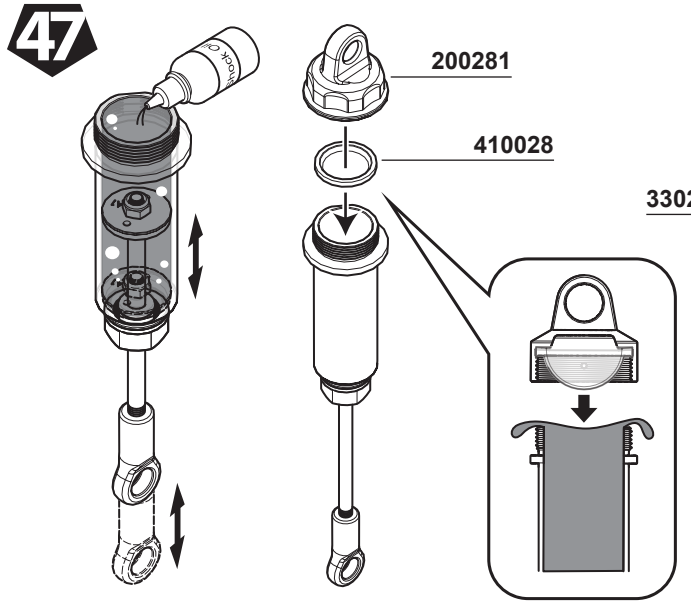


## 48 F/R x2 For Front x2 For Rear

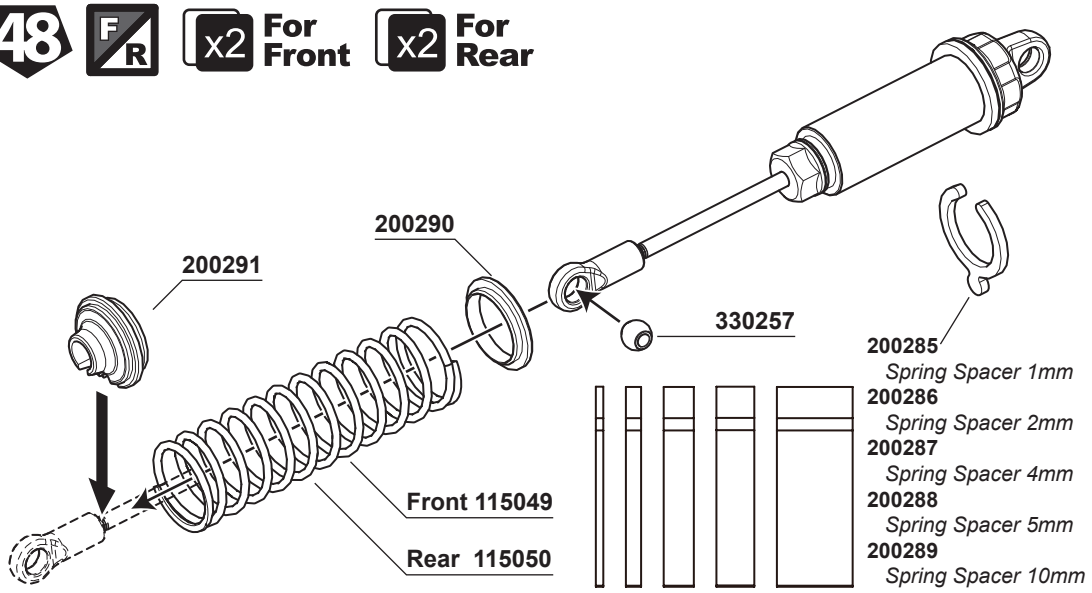

**105013**
*M3x28mm Cap Screw* ***x4***

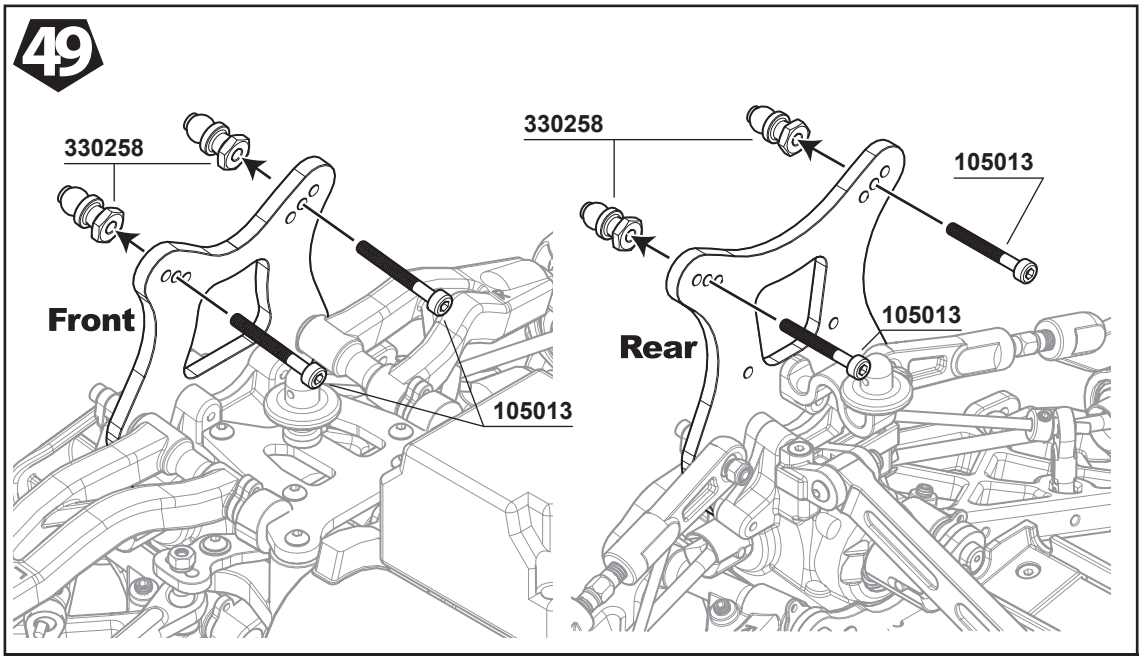

**103001**
*M3 Nut Lock* ***x4***

**106005**
*M3x15mm Hex Socket OH/TP Screw* ***x4***

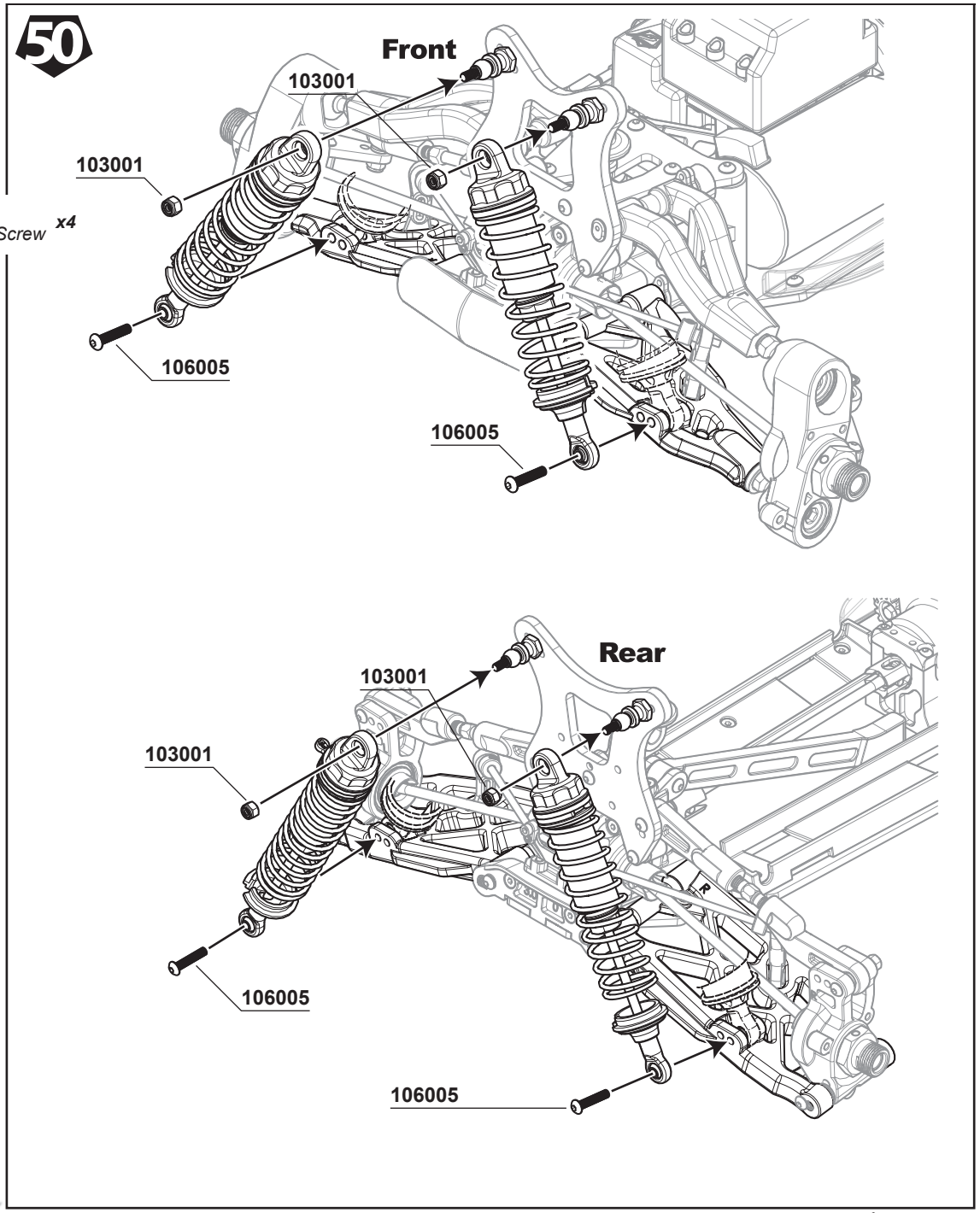

**103001**
*M3 Nut Lock* ***x4***

**106005**
*M3x15mm Hex Socket OH/TP Screw* ***x4***

## 51

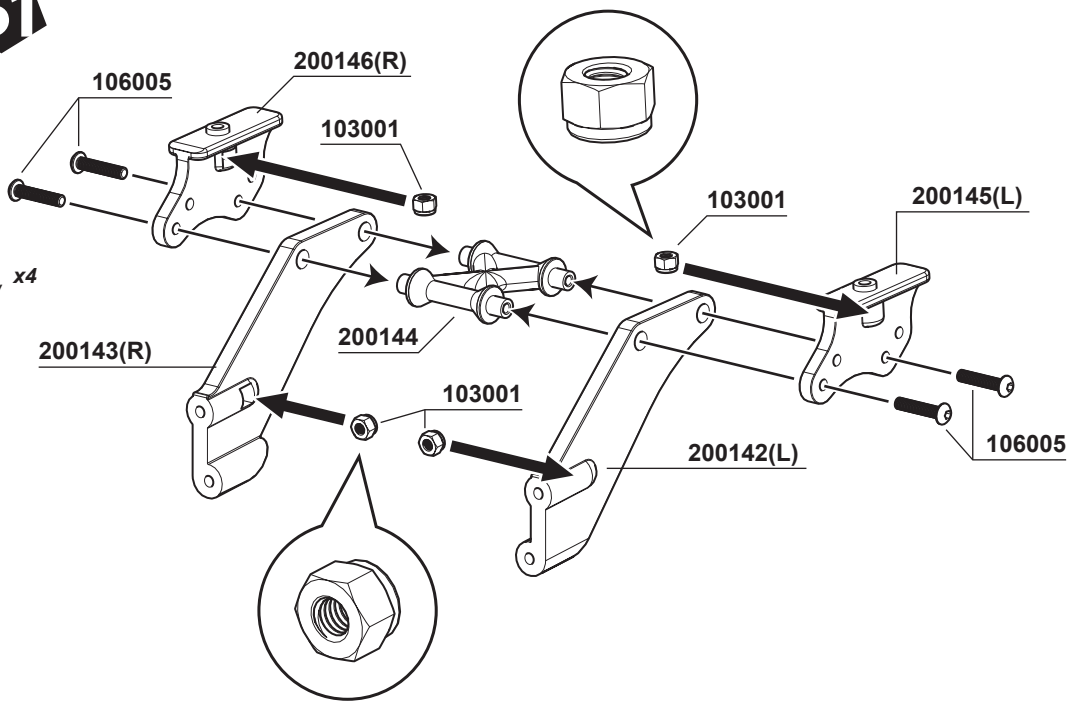

**106006**
*M3x20mm Hex Socket OH/TP Screw* ***x4***

## 52

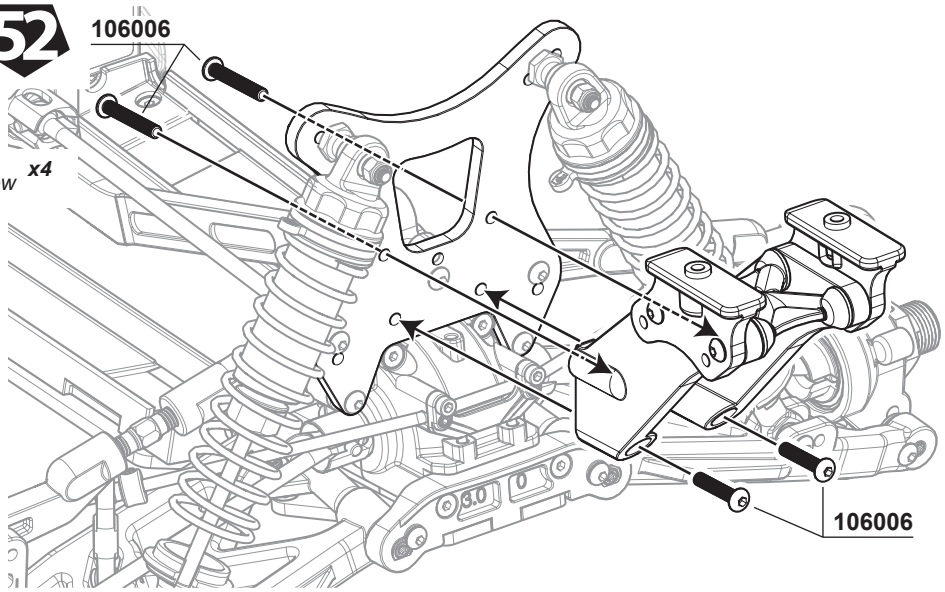

**105005**
*M3x12mm Cap Screw* ***x2***

## 53

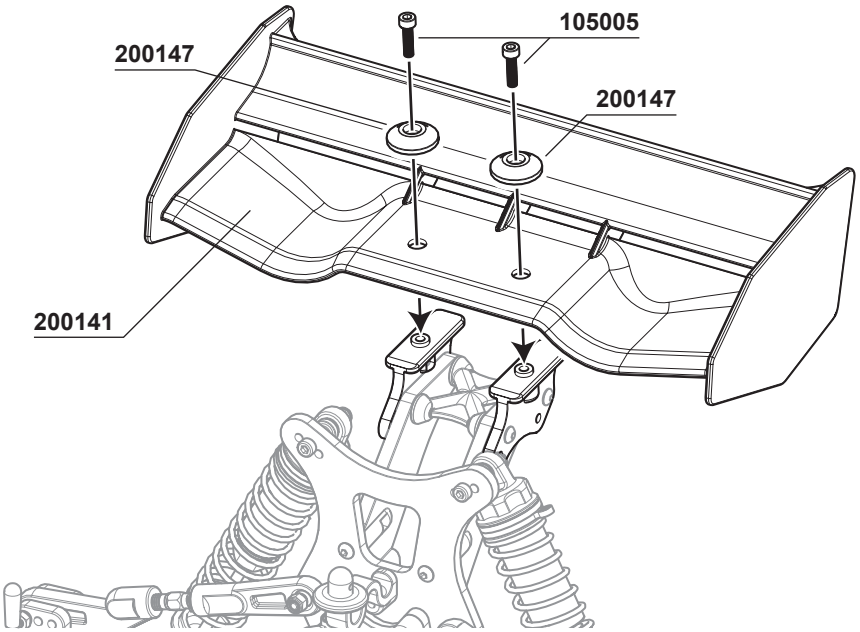

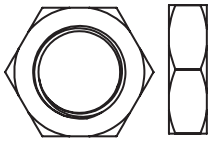

**330122**
*Wheel Nut* ***x4***

**54**

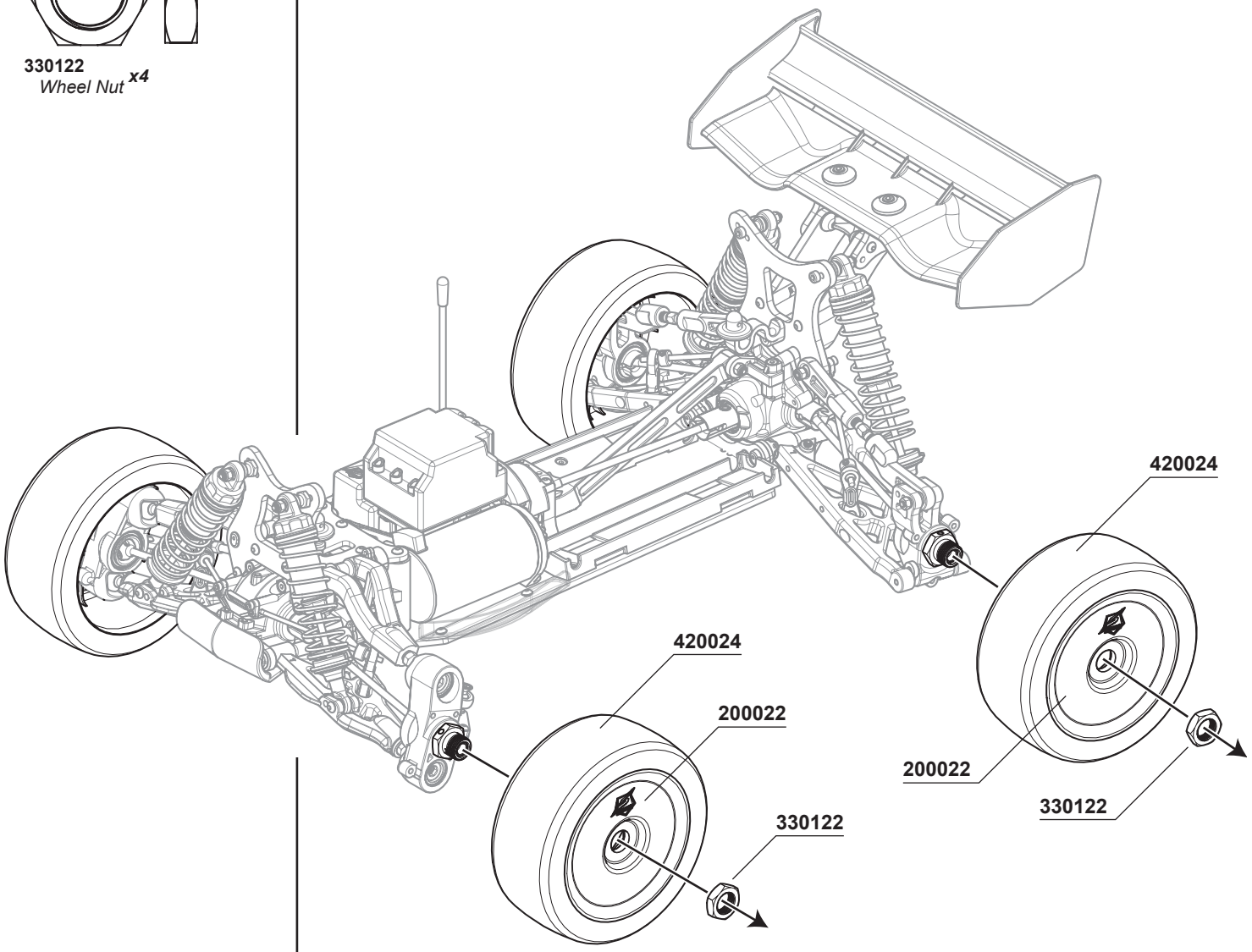

**106010**
*M3x6mm Hex Socket OH/TP Screw* ***x1***

**55** R L

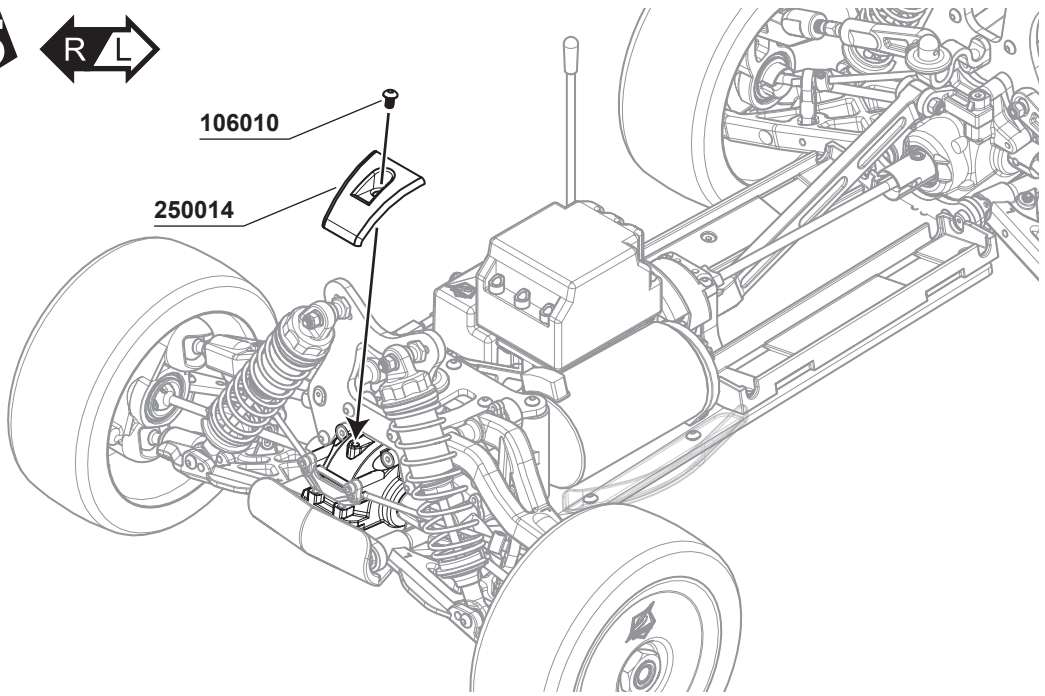

56

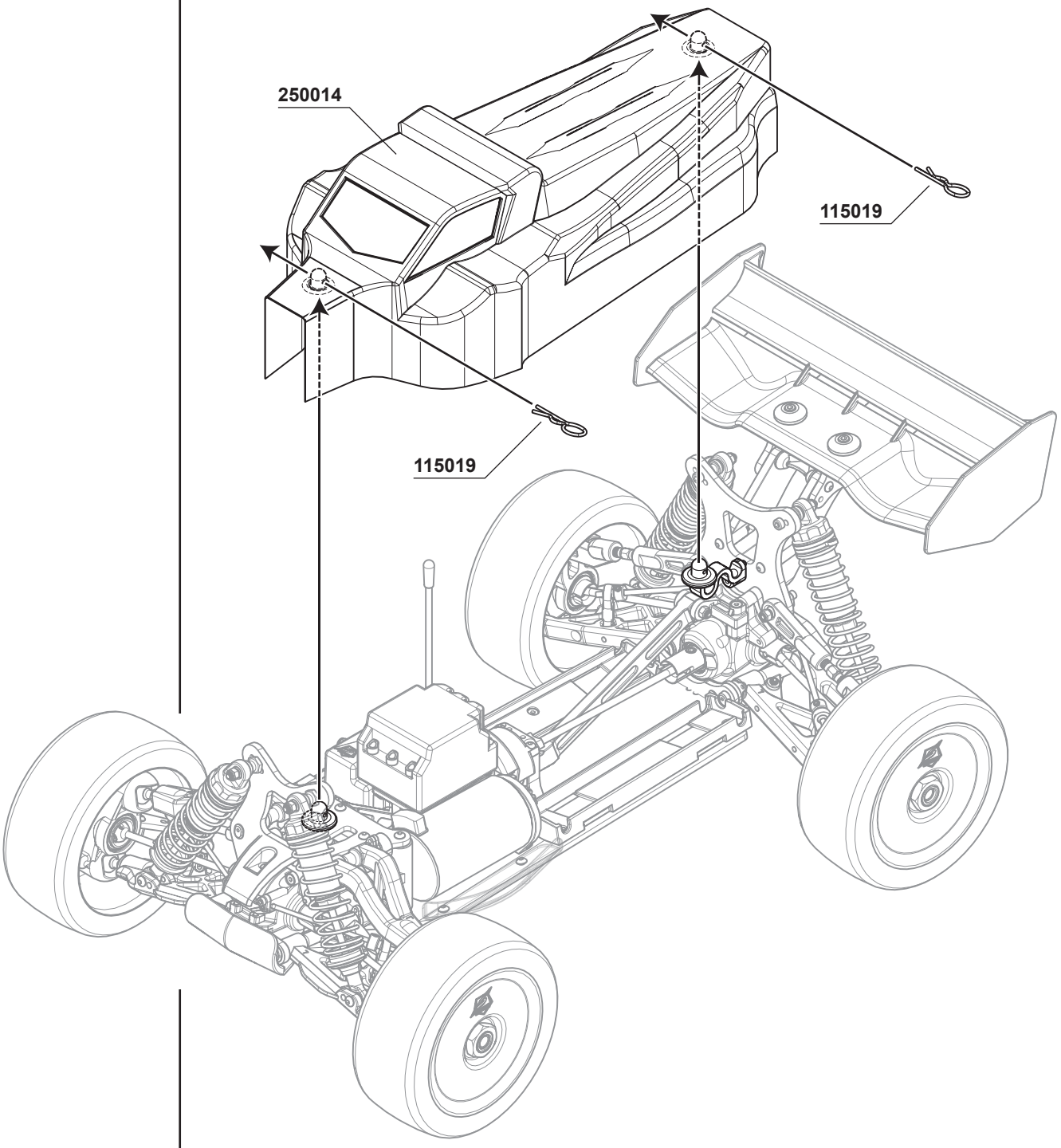

# SET-UP SHEET

Race time / Lap: _____

Best lap: _____

S350 BX1e

1/8 Off-Road Brushless Sport RTR Buggy

**Track Conditions**

Size: □ Open □ Med. □ Tight

Traction: □ High □ Med. □ Low

Surface: □ Smooth □ Med. □ Bumpy

Name: _____

Date: _____

Track: _____

**Diff. Oil**

Front: # _____

Center: # _____

Rear: # _____

**Electric System**

ESC Type: _____

Motor Type: _____

Motor Gear/Spur Gear: _____

Battery Type: _____

**Tire**

| Front | Rear |
|---|---|
| Type: _____ | Type: _____ |
| Foam: _____ | Foam: _____ |

**Front Suspension**

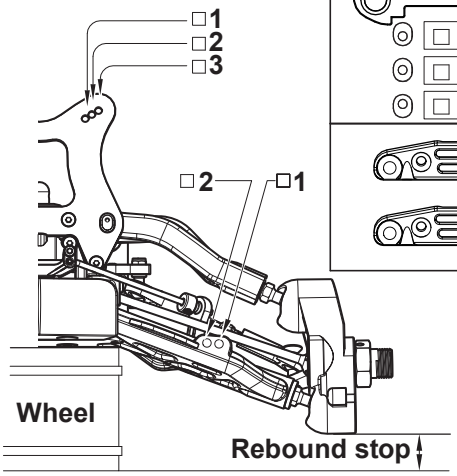


Front in-Board Toe

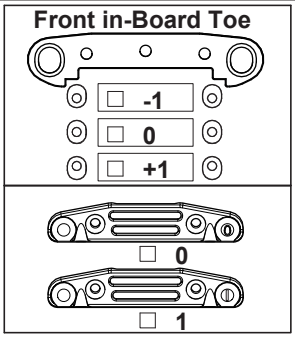


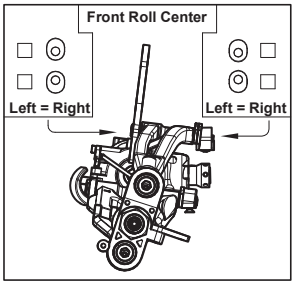


Track width _____ mm

Camber angle Upper _____ mm

Lower _____ mm

Toe angle _____

Rebound stop _____ mm

Sway bar □Use _____ mm

□None

**Front Shocks**

Oil: _____

Pistons: _____

Spring: _____

Spacer: _____ mm

**Steering Ackerman**

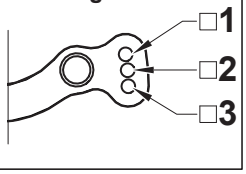


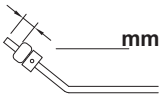

_____ mm

Notes: _____

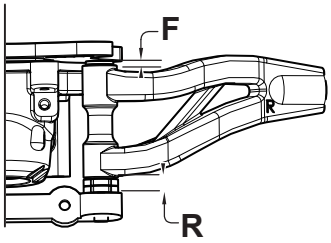


F: _____ mm

R: _____ mm

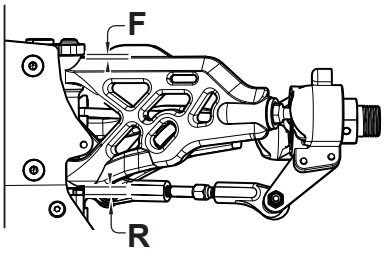


F: _____ mm

R: _____ mm

**RearSuspension**

Rear Toe-In

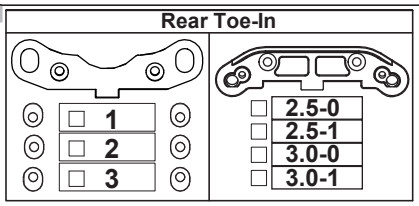


Upper arm position

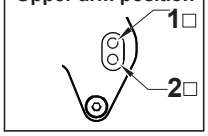


Wing Position

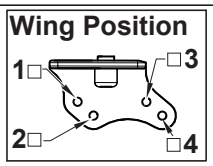


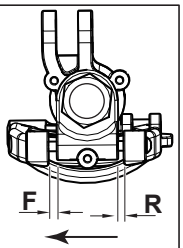


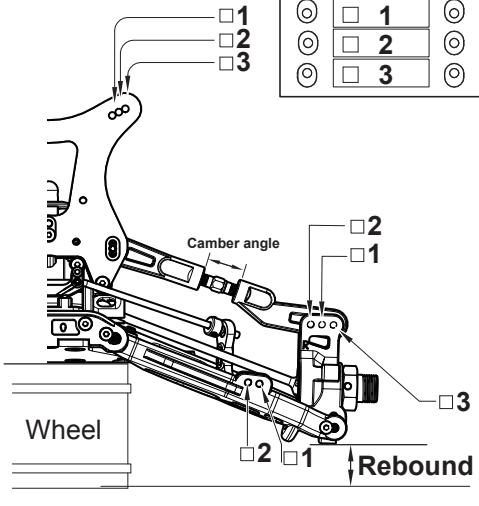


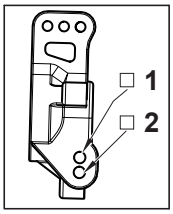


Camber angle _____ mm

Rebound stop _____ mm

**RearShocks**

Oil: _____

Pistons: _____

Spring: _____

Spacer: _____ mm

Wheelbase adjustment F _____ mm

R _____ mm

Sway bar □Use _____ mm

□None

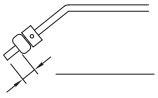

_____ mm

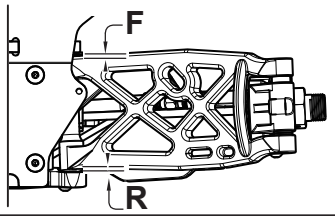


F: _____ mm

R: _____ mm

Notes: _____

# SET-UP SHEET

Race time / Lap: _____
Best lap: _____

S350 BX1e
1/8 Off-Road Brushless Sport RTR Buggy

**Track Conditions**
Size: □ Open □ Med. □ Tight
Traction: □ High □ Med. □ Low
Surface: □ Smooth □ Med. □ Bumpy

Name: *S350 BX1e Sport*
Date:
Track:

**Diff. Oil**
Front: # *3000*
Center: # *3000*
Rear: # *1000*

**Electric System**
ESC Type: *SePower SE-90 ESC*
Motor Type: *SePower SP-1800 BL*
Motor Gear/Spur Gear: *13/46T*
Battery Type:

**Tire**

| Front | | Rear | |
|---|---|---|---|
| Type: | *Standard* | Type: | *Standard* |
| Foam: | *Standard* | Foam: | *Standard* |

## Front Suspension

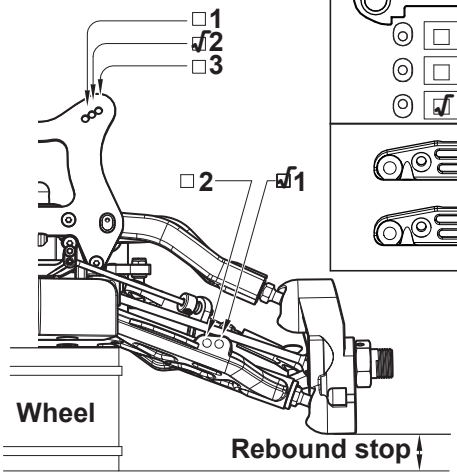


Front in-Board Toe

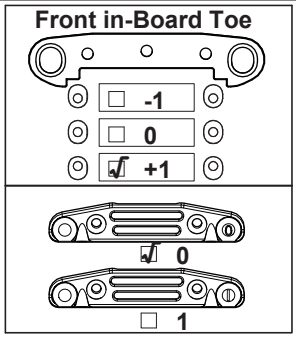


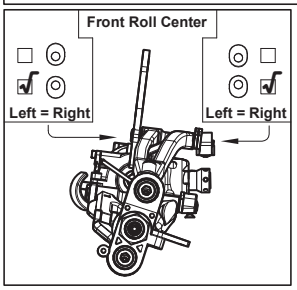


Track width *307* mm
Camber angle Upper ____ mm
Lower ____ mm
Toe angle ____
Rebound stop ____ mm
Sway bar √Use *2.3* mm
□None

**Front Shocks**
Oil: *350cps*
Pistons: *1.3x2Holes*
Spring: *BK*
Spacer: *10* mm

**Steering Ackerman**

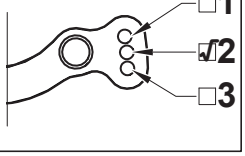


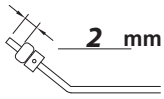


Notes:

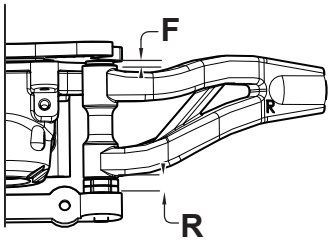


F: *4* mm
R: *0* mm

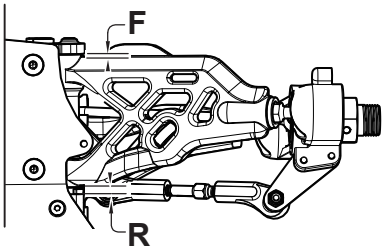


F: *0* mm
R: *2* mm

## RearSuspension

Rear Toe-In

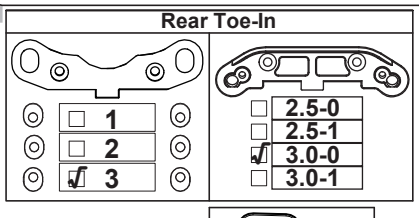


Upper arm position

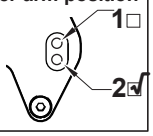


Wing Position

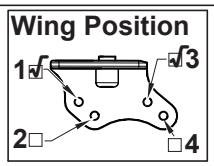


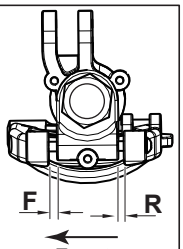


Camber angle *10* mm
Rebound stop ____ mm

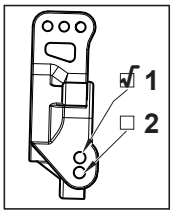


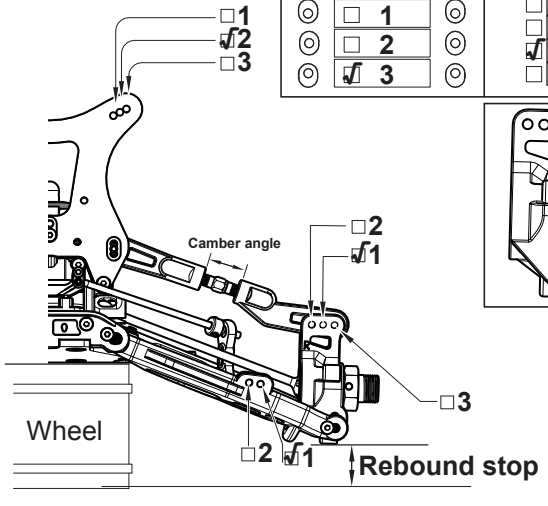


**RearShocks**
Oil: *350cps*
Pistons: *1.3x2Holes*
Spring: *BK*
Spacer: *10* mm

Wheelbase adjustment F *2* mm
R *3* mm
Sway bar √Use *2.8* mm
□None

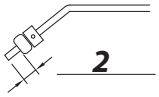


Notes:

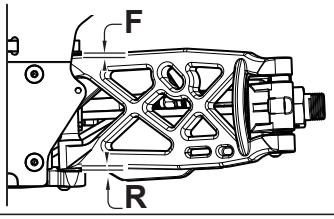


F: *1* mm
R: *0* mm

# Parts No. List

| Part No. | Part Name | Q`ty in Use | Item No. |
|---|---|---|---|
| 101004 | Washer 3.5X10X0.2mm | 12 | SW-101004 |
| 101010 | M3 Countersunk Washer | 2 | SW-101010 |
| 101014 | M3 Pivot Ball Bushing | 1 | SW-101014 |
| 101021 | M3x8xT1mm | 3 | SW-101021 |
| 103001 | M3 Nut Lock | 23 | SW-103001 |
| 103004 | M2.5mm Nut Lock | 4 | SW-103004 |
| 104001 | M5x4mm Set Screw | 4 | SW-104001 |
| 104004 | M3x3mm Set Screw | 4 | SW-104004 |
| 104005 | M3x4mm Set Screw | 4 | SW-104005 |
| 104007 | M4x8mm Set Screw | 4 | SW-104007 |
| 104008 | M4x4mm Set Screw | 1 | SW-104008 |
| 105004 | M2.6x6mm Cap Screw | 4 | SW-105004 |
| 105005 | M3x12mm Cap Screw | 2 | SW-105005 |
| 105011 | M3x23mm Cap Screw | 2 | SW-105011 |
| 105012 | M3x10mm Cap Screw | 2 | SW-105012 |
| 105013 | M3x25mm Cap Screw (HT) | 4 | SW-105013 |
| 106002 | M3x10mm Hex Soket OH/TP Screw | 15 | SW-106002 |
| 106003 | M3x16mm Hex Soket OH/TP Screw | 6 | SW-106003 |
| 106005 | M3x15mm Hex Soket OH/TP Screw | 13 | SW-106005 |
| 106006 | M3x20mm Hex Soket OH/TP Screw | 3 | SW-106006 |
| 106008 | M3x12mm Hex Soket OH/TP Screw | 14 | SW-106008 |
| 106010 | M3x6mm Hex Soket OH/TP Screw | 17 | SW-106010 |
| 106011 | M3x4mm Hex Soket OH/TP Screw | 7 | SW-106011 |
| 106012 | M3x35mmHex Soket OH/TP Screw | 2 | SW-106012 |
| 108001 | M3x12mm FH/ST HEX Screw | 8 | SW-108001 |
| 108003 | M3x10mm FH/ST HEX Screw | 14 | SW-108003 |
| 108006 | M3x8mm FH/ST HEX Screw | 8 | SW-108006 |
| 108007 | M3x6mm FH/ST HEX Screw | 14 | SW-108007 |
| 108008 | M3x35mm FH/ST HEX Screw | 2 | SW-108008 |
| 108009 | M3x20mm FH/ST HEX Screw | 4 | SW-108009 |
| 108010 | M4x10mm FH/ST HEX Screw | 6 | SW-108010 |
| 108012 | M4x16mm FH/ST HEX Screw | 8 | SW-108012 |
| 108014 | M3x3mm FH/ST HEX Screw | 4 | SW-108014 |
| 108015 | M3X16mm FH/ST HEX Screw | 4 | SW-108015 |
| 115004 | Servo Saver Spring | 1 | SW-330114 |
| 115005 | Rear Sway Ball 2.8mm | 1 | SW-115005 |
| 115008 | Front Sway Ball 2.3mm | 1 | SW-115008 |
| 115019 | Body Clip | 2 | SW-115019 |
| 115049 | 1/8RTR Shock Spring18x82x1.5mmx10.5c(S) | 2 | SW-210010 |
| 115050 | 1/8 RTR Shock Spring (L) | 2 | SW-210010 |
| 116006 | Ball Bearing 8x16x5mm | 14 | SW-116006 |
| 116012 | Ball Bearing 15x21x4mm | 4 | SW-116012 |
| 200023 | Gear Box (F) | 2 | SW-2501114 |
| 200024 | Gear Box (R) | 2 | SW-2501114 |
| 200101 | S-Way Bar Holder | 2 | SW-2501114 |
| 200102 | Front Lower Arm Holder (0 degree) | 1 | SW-2501096 |
| 200103 | Front Lower Arm Holder (1 degree) | 1 | SW-2501096 |
| 200104 | Rear Lower Arm Plate (0-2.5 D) | 1 | SW-2501096 |
| 200105 | Rear Lower Arm Plate (0-3.0 D) | 1 | SW-2501096 |
| 200106 | Rear Lower Arm Plate (1-2.5 D) | 1 | SW-2501096 |
| 200107 | Rear Lower Arm Plate (1-3.0 D) | 1 | SW-2501096 |
| 200108 | R/F Insert (1 degree) | 2 | SW-2501099 |
| 200109 | R/F Insert (0 degree) | 2 | SW-2501099 |
| 200110 | F/F Insert (1 degree) | 2 | SW-2501099 |
| 200111 | Front Bumper | 1 | SW-2501097 |
| 200114 | Brake Holder | 2 | SW-2501114 |
| 200115 | Brake Cam Insert | 2 | SW-2501114 |
| 200116 | Settring Bellcrank Upper ( R ) | 1 | SW-2501122 |
| 200117 | Settring Bellcrank ( R ) | 1 | SW-2501122 |
| 200118 | Settring Bellcrank ( L ) | 1 | SW-2501122 |
| 200119 | Rear Shock Tower Insert | 1 | SW-2501114 |
| 200120 | Front Lower Arm (L) | 1 | SW-2501093 |
| 200121 | Front Lower Arm ( R ) | 1 | SW-2501093 |
| 200122 | Front Steering Knuckle ( L ) | 1 | SW-2501098 |
| 200123 | Front Steering Knuckle ( R ) | 1 | SW-2501098 |
| 200124 | Pivot Ball Cup | 4 | SW-2501100 |
| 200125 | Front Upper Arm Holder | 1 | SW-2501096 |
| 200126 | F/Up Insert (1 degree) | 4 | SW-2501099 |
| 200127 | Front Upper Arm (L) | 1 | SW-2501113 |
| 200128 | Front Upper Arm ( R ) | 1 | SW-2501113 |
| 200129 | Rear Hub Carrier (L) | 1 | SW-2501095 |
| 200130 | Rear Hub Carrier ( R ) | 1 | SW-2501095 |
| 200131 | Rear Lower Arm (L) | 1 | SW-2501094 |
| 200132 | Rear Lower Arm ( R ) | 1 | SW-2501094 |
| 200133 | Lower Arm Insert (1mm) | 2 | SW-2501100 |
| 200134 | Lower Arm Insert (1mm) | 6 | SW-2501100 |
| 200135 | Rear Wheel Axle Insert (1mm) | 4 | SW-2501100 |
| 200136 | Rear Wheel Axle Insert (2mm) | 2 | SW-2501100 |
| 200137 | Rear Upper Arm Ball End (For Wheel Side) | 2 | SW-2501121 |
| 200138 | Rear Upper Arm Ball End | 2 | SW-2501121 |
| 200139 | Steering Ball End | 2 | SW-2501121 |
| 200140 | Steering Ball End (For Wheel Side) | 2 | SW-2501121 |
| 200141 | S-WORKz High Done Force Wing | 1 | SW-2501116 |
| 200142 | Wing Stay (L) | 1 | SW-2501097 |
| 200143 | Wing Stay (R) | 1 | SW-2501097 |
| 200144 | Wing Stay Holder | 1 | SW-2501097 |
| 200145 | Wing Support (L) | 1 | SW-2501097 |
| 200146 | Wing Support (R) | 1 | SW-2501097 |
| 200147 | Wing Holder | 2 | SW-2501116 |

| Part No. | Part Name | Q`ty in Use | Item No. |
|---|---|---|---|
| 200148 | Shock Cap Insert | 4 | SW-2501121 |
| 200149 | Shock Ball End | 4 | SW-2501121 |
| 200150 | Shock Spring Holder | 4 | SW-2501121 |
| 200151 | Rear Wheel Dusty Cover ( L ) | 1 | SW-2501118 |
| 200152 | Front Wheel Dusty Cover ( R ) | 1 | SW-2501118 |
| 200153 | Front Wheel Dusty Cover ( L ) | 1 | SW-2501118 |
| 200154 | Front Wheel Dusty Cover ( R ) | 1 | SW-2501118 |
| 200158 | Sway Bar Linkage | 4 | SW-2501121 |
| 200170 | Rear Body Mount | 1 | SW-2501097 |
| 200171 | Front Body Mount | 1 | SW-2501097 |
| 200172 | Rear Chassis Brace Mount | 1 | SW-2501122 |
| 200175 | Steering Servo Horn (For Futaba) | 1 | SW-2501122 |
| 200176 | Steering Servo Horn (For S&K) | 1 | SW-2501122 |
| 200177 | Steering Servo Horn (For Hitec) | 1 | SW-2501122 |
| 200178 | Servo Mount | 2 | SW-2501122 |
| 200179 | Steering Linkage Ball End | 2 | SW-2501121 |
| 200180 | Throttle Servo Horn (For Futaba) | 1 | SW-2501122 |
| 200181 | Throttle Servo Horn (For S&K) | 1 | SW-2501122 |
| 200182 | Throttle Servo Horn (For Hitec) | 1 | SW-2501122 |
| 200183 | Brake Servo Horn | 1 | SW-2501122 |
| 200184 | Brake Linkage Holder | 2 | SW-2501099 |
| 200185 | Throttle Linkage Ball End | 1 | SW-2501121 |
| 200186 | Throttle Linkage Holder | 1 | SW-2501099 |
| 200187 | Throttle Linkage Holder (Done) | 1 | SW-2501099 |
| 200188 | Throttle Linkage Holder (Up) | 1 | SW-2501099 |
| 200193 | Antenna Tube | 1 | SW-200193 |
| 200253 | S350 BX1/BR1Rear Chassis Brace | 1 | SW-2501529 |
| 200254 | S350 BX1/BR1 Front Chassis Brace | 1 | SW-2501529 |
| 200267 | S350 BX1/BR1 S-System Pinion Gear Holder (Plastic) | 2 | SW-2501529 |
| 200268 | BE1 Spur Gear 46T Plastic | 1 | SW-2501469 |
| 200269 | BE1 Center Diff. Mount Cover | 1 | SW-2501471 |
| 200270 | BE1 LiPo Battery Case (L) | 1 | SW-2501470 |
| 200271 | BE1 LiPo Battery Case (R) | 1 | SW-2501470 |
| 200272 | BE1 Steering Servo Mount | 1 | SW-2501471 |
| 200273 | BE1 Receiver Box Cover | 1 | SW-2501471 |
| 200274 | BE1 Receiver Box Holder | 1 | SW-2501471 |
| 200275 | BE1 Receiver Box Post | 1 | SW-2501471 |
| 200276 | Servo Mount | 1 | SW-2501471 |
| 200277 | Transponder Mount | 1 | SW-2501471 |
| 200278 | BE1 Spur Gear 45T Plastic | 1 | SW-2501469 |
| 200279 | BE1 Spur Gear 47T Plastic | 1 | SW-2501469 |
| 200280 | S350 BX1 Rear Lower Arm Holder Insert | 1 | SW-2501529 |
| 200281 | 1/8 RTR Shock Cap | 4 | SW-25032-001A |
| 200282 | 1/8 RTR Shock PistonA 2 holes | 4 | SW-25032-001A |
| 200283 | 1/8 RTR Shock PistonB 2 holes | 4 | SW-25032-001A |
| 200284 | 1/8 RTR Shock Seal Cap | 4 | SW-25032-001A |
| 200285 | 1/8 RTR Shock Spring Spacer 1mm | 4 | SW-25033-001 |
| 200286 | 1/8 RTR Shock Spring Spacer 2mm | 4 | SW-25033-001 |
| 200287 | 1/8 RTR Shock Spring Spacer 4mm | 4 | SW-25033-001 |
| 200288 | 1/8 RTR Shock Spring Spacer 5mm | 4 | SW-25033-001 |
| 200289 | 1/8 RTR Shock Spring Spacer 10mm | 4 | SW-25033-001 |
| 200290 | 1/8 RTR Shock Spring Holder | 4 | SW-25033-001 |
| 200291 | 1/8 RTR Shock Spring End | 4 | SW-25033-001 |
| 200292 | 1/8 RTR Shock Ball End | 4 | SW-25033-001 |
| 200293 | 1/8 RTR Shock Washer | 4 | SW-25033-001 |
| 200294 | 1/8 Buggy Servo Holder Insert 1mm | 6 | SW-2501668 |
| 200295 | 1/8 Buggy Servo Holder Insert 3mm | 4 | SW-2501668 |
| 200296 | S350 Series Servo Savor Plastic Insert 6x10x3mm | 4 | SW-2501668 |
| 200297 | Knuckle Pivot Ball Washer 2mm | 2 | SW-2501668 |
| 200298 | Knuckle Pivot Ball Washer 1mm | 2 | SW-2501668 |
| 210002 | Diff Case with Matel part | 3 | SW-210002 |
| 250014 | S350 BX1e Shark Style Clean Body Shell(Pre Cut) | 1 | SW-250014 |
| 250015 | S350 BE1 Side Guard R/L (Pre Cut) | 1 | SW-250015 |
| 300024 | S350 BX1/BR1 Settring BellcrankPlate 3mm(AL6061) | 1 | SW-300024 |
| 300026 | S350 BX1 Rear Lower Arm Holder(3mm Al6061) | 1 | SW-300026 |
| 300027 | S350 BX1/BR1 Front Shock Tower (4mm Al6061) | 1 | SW-300027 |
| 300028 | S350 BX1/BR1 Rear Shock Tower (4mm Al6061) | 1 | SW-300028 |
| 300029 | S350 BX1/BR1 Front Lower Arm Plate | 1 | SW-300029 |
| 300030 | S350 BX1/BR1 Steering Knuckle Plate(L/R)3mm(AL6061) | 2 | SW-300030 |
| 300031 | S350 BX1/BR1 Settring Plate 3mm(AL6061) | 1 | SW-300031 |
| 320003 | Diff. Bevel Gear 18T | 6 | SW-320003 |
| 320004 | Diff. Bevel Gear 10T | 12 | SW-320003 |
| 330013 | Bevel Gear Shaft | 6 | SW-330013 |
| 330014 | Front/Rear Diff. Outdrive | 4 | SW-330014 |
| 330015 | Pin M2.2x9.9mm | 6 | SW-330015 |
| 330017 | Center Diff. Outdrive | 2 | SW-330017 |
| 330086 | Front Lower Suspension Plate | 1 | SW-330086 |
| 330103 | Front/Rear Lower Arm HingPin | 4 | SW-330103 |
| 330109 | F/R Drive Shaft 93.5mm | 2 | SW-330109 |
| 330110 | CVD Join | 2 | SW-330110 |
| 330111 | Pin M2.5x14.8mm | 2 | SW-330111 |
| 330112 | CVD Axle | 2 | SW-330112 |
| 330113 | Servo Saver Shaft | 2 | SW-330113 |
| 330114 | Servo Saver Post | 1 | SW-330114 |
| 330118 | Knuckle Pivot Ball Nut | 4 | SW-330118 |
| 330119 | Front Upper Arm HingPin | 2 | SW-330119 |
| 330120 | Rear Hub Carriers Hing pin | 2 | SW-330120 |
| 330121 | Wheel Hub | 4 | SW-330121 |
| 330122 | Wheel Nut | 4 | SW-330122 |

## Parts No. List

| Part No. | Part Name | Q`ty in Use | Item No. |
|---|---|---|---|
| 330123 | Rear Upper Sus. Arm Turnbuckles | 2 | SW-330123 |
| 330124 | Pin M3.0x16.8mm | 4 | SW-330124 |
| 330125 | Rear Upper Sus. Arm Ball Stud | 4 | SW-330125 |
| 330126 | Steering Turnbuckle | 2 | SW-330126 |
| 330127 | Steering Linkage Ball Stud 7mm | 4 | SW-330127 |
| 330134 | Shock Ball Stud | 6 | SW-330134 |
| 330135 | Servo Saver Nut | 1 | SW-330135 |
| 330136 | Sway Bar Ball Stud | 4 | SW-330136 |
| 330155 | Steering Servo Turnbuckle (M3x30mm) | 1 | SW-330155 |
| 330160 | S-System Pinion Gear 13T | 2 | SW-330160 |
| 330164 | Crown Gear 43T | 2 | SW-330164 |
| 330227 | S350 BX1/BR1 Center Drive Join | 2 | SW-330227 |
| 330228 | S350 BX1/BR1 Rear Wheel Hub Axil | 2 | SW-330228 |
| 330232 | S350 BX1/BR1 Rear Drive Shaft 93mm | 2 | SW-330232 |
| 330233 | S350 BX1 C/F Dog Bone 113mm | 1 | SW-330233 |
| 330235 | BE1 Motor Gear 13T | 1 | SW-330235 |
| 330236 | BE1 Aluminum Center Diff. Mount (F) | 1 | SW-330236 |
| 330238 | BE1 Aluminum Center Diff. Mount (R) | 1 | SW-330238 |
| 330241 | BE1 Center Supar Gear Mount | 1 | SW-330241 |
| 330251 | S350 BX1/BR1 Steering Plate Bushing | 2 | SW-330251 |
| 330252 | Steering Knuckle Pivot Ball Turnbuckle | 4 | SW-330252 |
| 330253 | 1/8 RTR Shock Shaft (S) | 2 | SW-330253 |
| 330254 | 1/8 RTR Shock Shaft (L) | 2 | SW-330254 |
| 330255 | 1/8 RTR Shock Body (L) | 2 | SW-330255 |
| 330256 | 1/8 RTR Shock Body (S) | 2 | SW-330256 |
| 330257 | 1/8 RTR Shock Ball End Stud | 4 | SW-330257 |
| 330258 | 1/8 RTR Shock Stud | 4 | SW-330258 |
| 330259 | S350 BX1e Main Chassis | 1 | SW-330259 |
| 330260 | S350 BX1e C/F Dog Bone 88.5mm | 1 | SW-330260 |
| 400002 | O-ring S5 4.8X1.5 | 6 | SW-400002 |
| 410028 | 1/8 RTR Shock Bladder | 4 | SW-410028 |
| 410029 | 1/8 RTR shock seal O-Ring | 8 | SW-410029 |
| 420010 | Antenna Cup | 1 | SW-420010 |
| 420024 | 1/8 Off Road RTR Tire | 4 | SW-420024 |
| 510032 | S350 BE1 Body Window Mask | 1 | SW-510031 |
| 510037 | S350 BX1e Body Decal Sheet | 1 | SW-510037 |
| 540001 | Hook & Loop strap 2x22.5cm | 4 | SW-540001 |
| 610002 | Diff. Gasket (0.5T) | 3 | SW-610002 |
| 610011 | RTR Tire insert | 4 | SW-610011 |
| 200022WH | 1/8 UFO Competiton Wheel set | 4 | SW-200022WH |
| 840011 | SWORkz SW-T1/R1 2.4G 3 channels Radio Set | 1 | SW-840011 |
| 840007 | SES-2W 9kg Metal Gear Servo(F Connect) | 1 | SW-840007 |
| 840009 | S-ePOWER SE-90 90A BL ESC | 1 | 840009 |
| 840010 | S-ePOWER SP-1800 BL MOTOR | 1 | 840010 |

## Spare Part List

| Item No. | Part Name |
|---|---|
| SW-101004 | Washer 3.5X10X0.2mm |
| SW-101010 | M3 Countersunk Washer (RD) |
| SW-101014 | M3 Pivot Ball Bushing |
| SW-101021 | M3x8xT1mm |
| SW-103001 | M3 Nut Lock |
| SW-103004 | M2.5mm Nut Lock |
| SW-104001 | M5x4mm Set Screw |
| SW-104004 | M3x3mm Set Screw |
| SW-104005 | M3x4mm Set Screw |
| SW-104007 | M4x8mm Set Screw |
| SW-104008 | M4x4mm Set Screw |
| SW-105004 | M2.6x6mm Cap Screw |
| SW-105005 | M3x12mm Cap Screw |
| SW-105011 | M3x23mm Cap Screw |
| SW-105012 | M3x10mm Cap Screw |
| SW-105013 | M3x25mm Cap Screw (HT) |
| SW-106002 | M3x10mm Hex Soket OH/TP Screw |
| SW-106003 | M3x16mm Hex Soket OH/TP Screw |
| SW-106005 | M3x15mm Hex Soket OH/TP Screw |
| SW-106006 | M3x20mm Hex Soket OH/TP Screw |
| SW-106008 | M3x12mm Hex Soket OH/TP Screw |
| SW-106010 | M3x6mm Hex Soket OH/TP Screw |
| SW-106011 | M3x4mm Hex Soket OH/TP Screw |
| SW-106011 | M3x4mm Hex Soket OH/TP Screw |
| SW-106012 | M3x35mmHex Soket OH/TP Screw |
| SW-108001 | M3x12mm FH/ST HEX Screw |
| SW-108003 | M3x10mm FH/ST HEX Screw |
| SW-108006 | M3x8mm FH/ST HEX Screw |
| SW-108007 | M3x6mm FH/ST HEX Screw |
| SW-108008 | M3x35mm FH/ST HEX Screw |
| SW-108009 | M3x20mm FH/ST HEX Screw |
| SW-108010 | M4x10mm FH/ST HEX Screw |
| SW-108012 | M4x16mm FH/ST HEX Screw |
| SW-108014 | M3x3mm FH/ST HEX Screw |
| SW-108015 | M3X16mm FH/ST HEX Screw |
| SW-115005 | Rear Sway Ball 2.8mm |
| SW-115008 | Front Sway Bar 2.3mm |
| SW-115019 | 1/8 Body Clip(6pc) |
| SW-116006 | Ball Bearing 8x16x5mm (10pc) |
| SW-116012 | Ball Bearing 15x21x4mm(8pc) |
| SW-200022WH | S-WORKz 1/8 UFO Competiton Wheel set |
| SW-200193 | Antenna Tube |
| SW-210002 | S350 Diff. Case Set |
| SW-210010 | 1/8 RTR Shock Spring Set |
| SW-250014 | S350 BX1e Shark Style Clean Body Shell(Pre Cut) |
| SW-250015 | S350 BE1 Side Guard R/L (Pre Cut) |
| SW-2501093 | S350 Front Lower Arm Set (L&R) |
| SW-2501094 | S350 Rear Lower Arm Set (L&R) |
| SW-2501095 | S350 Rear Hub Carrier Set (L&R) |
| SW-2501096 | S350 Full Arm Holder Set (7pc) |
| SW-2501097 | S350 Wing Stay Set with Bumper |
| SW-2501098 | S350 Front Steering Knuckle Set (L&R) |
| SW-2501099 | S350 R/F Insert, Brake, Throttle Linkage Linkage Holder |
| SW-2501100 | S350 Pivot Ball Cup, Caster Insert Set |
| SW-2501113 | S350 Front Upper Arm Set (L&R) |
| SW-2501114 | S350 Gear Box Set (F&R) |
| SW-2501116 | S-WORKz High Done Force Wing Set (BK)(Fit S350) |
| SW-2501121 | S350 Ball End Set with Shock Plastic Parts (2 Set) |
| SW-2501122 | S350 Settring Bellcrank Set with Servo Horn Set |
| SW-2501469 | S350 BE1Series Spur Gear Set(45T/46T/47T) |
| SW-2501470 | S350 BE1Series LiPo Battery(25mm) Case Set |
| SW-2501471 | S350 BE1Series Receiver Box & Steering Servo Holder Set |
| SW-2501529 | S350 BX1/BR1 Plastic Chassis Brace Set |
| SW-2501668 | S350 Series Plastic Insert Set |
| SW-25032-001A | 1/8 RTR Shock Cap & Seal Plastic Set |
| SW-25033-001 | 1/8 RTR Shock Spring Plastic Parts |
| SW-300024 | S350 BX1/BR1 Settring BellcrankPlate 3mm(AL6061) |
| SW-300026 | S350 BX1 Rear Lower Arm Holder(3mm Al6061) |
| SW-300027 | S350 BX1/BR1 Front Shock Tower (4mm Al6061) |
| SW-300028 | S350 BX1/BR1 Rear Shock Tower (4mm Al6061) |
| SW-300029 | S350 BX1/BR1 Front Lower Arm Plate |
| SW-300030 | S350 BX1/BR1 Steering Knuckle Plate (L/R) 3mm(AL6061) |
| SW-300031 | S350 BX1/BR1 Settring Plate 3mm(AL6061) |
| SW-320003 | Diff. Bevel Gear Set |

## Spare Part List

| Item No. | Part Name |
|---|---|
| SW-330013 | Bevel Gear Shaft |
| SW-330014 | Front/Rear Diff. Outdrive |
| SW-330015 | Pin M2.2x9.9mm |
| SW-330017 | Center Diff. Outdrive |
| SW-330103 | Front/Rear Lower Arm HingPin |
| SW-330109 | F/R Drive Shaft 93.5mm |
| SW-330110 | CVD Join |
| SW-330111 | S350 Serie CVD Pin M2.5x14.8mm(6pc) |
| SW-330112 | CVD Axle |
| SW-330113 | Servo Saver Shaft |
| SW-330114 | Servo Saver Post |
| SW-330118 | Knuckle Pivot Ball Nut |
| SW-330119 | Front Upper Arm HingPin |
| SW-330120 | Rear Hub Carriers Hing pin |
| SW-330121 | Wheel Hub |
| SW-330122 | Wheel Nut |
| SW-330123 | Rear Upper Sus. Arm Turnbuckles |
| SW-330124 | Pin M3.0x16.8mm |
| SW-330125 | Rear Upper Sus. Arm Ball Stud |
| SW-330126 | Steering Turnbuckle |
| SW-330127 | Steering Linkage Ball Stud 7mm |
| SW-330134 | Shock Ball Stud 6mmxL6.7 |
| SW-330136 | Sway Bar Ball Stud |
| SW-330155 | Steering Servo Turnbuckle (M3x30mm) |
| SW-330164 | Crown Gear 43T |
| SW-330227 | S350 BX1/BR1 Center Drive Join |
| SW-330228 | S350 BX1/BR1 Rear Wheel Hub Axil |
| SW-330232 | S350 BX1/BR1 Rear Drive Shaft 93mm |
| SW-330233 | S350 BX1 C/F Dog Bone 113mm |
| SW-330235 | S350 BE1 Series Motor Gear 13T |
| SW-330236 | S350 BE1 Series Aluminum Center Diff. Mount (F) |
| SW-330237 | S350 BE1 Series Main Chassis for Pro Kit |
| SW-330238 | S350 BE1 Series Aluminum Center Diff. Mount (R) |
| SW-330241 | S350 BE1 Series Center Supar Gear Mount |
| SW-330251 | S350 BX1/BR1 Steering Plate Bushing |
| SW-330252 | Steering Knuckle Pivot Ball Turnbuckle |
| SW-330253 | 1/8 RTR Shock Shaft (S) |
| SW-330254 | 1/8 RTR Shock Shaft (L) |
| SW-330255 | 1/8 RTR Shock Body (L) |
| SW-330256 | 1/8 RTR Shock Body (S) |
| SW-330257 | 1/8 RTR Shock Ball End Stud |
| SW-330258 | 1/8 RTR Shock Stud |
| SW-330259 | S350 BX1e Main Chassis |
| SW-330260 | S350 BX1e C/F Dog Bone 88.5mm |
| SW-400002 | O-ring S5 4.8X1.5 |
| SW-410028 | 1/8 RTR Shock Bladder |
| SW-410029 | 1/8 RTR shock seal O-Ring |
| SW-420010 | Antenna Cup |
| SW-420024 | 1/8 Off Road RTR Tire |
| SW-510037 | S350 BX1e Body Decal Sheet |
| SW-540001 | Hook & Loop strap 2x22.5cm(4pc) |
| SW-610002 | Diff. Gasket (0.5T)(6pc) |
| SW-610011 | RTR Tire insert |

## Option Part List

| Item No. | Part Name |
|---|---|
| SW-210019 | S350 Shock Spring SET 1.6mm (S)(P0.8)(BL) |
| SW-116004 | Ball Bearing 6x10x3mm (4pc) |
| SW-117003 | Flange Ball Bearing 3x6x2.5mm(2pc) |
| SW-210005 | S350 Series Front Super Shock Tower |
| SW-210006 | S350 Series Rear Super Shock Tower |
| SW-210020 | S350 Shock Spring SET 1.5mm(SS)(P0.8)(SL) |
| SW-2501116A | S-WORKz High Done Force Wing Set (BK) |
| SW-2501116AFY | S-WORKz High Done Force Wing Set (FY) |
| SW-2501116AFY | S-WORKz High Done Force Wing Set (FY) |
| SW-2501116AWH | S-WORKz High Done Force Wing Set (WH) |
| SW-2501116AWH | S-WORKz High Done Force Wing Set (WH) |
| SW-2501118 | S350 Wheel Dusty Cover Set |
| SW-330086 | S350 Front Lower Suspension Plate |
| SW-330087 | S350 Front Shock Tower (Al) |
| SW-330088 | S350 Rear Lower Arm Holder |
| SW-330089 | S350 Rear Shock Tower (Al) |
| SW-330091 | Steering BellcrankPlate |
| SW-330092 | Servo Saver Steering Plate |
| SW-330093 | Steering Knuckle Plate Set(L&R) |
| SW-330097 | Shock Piston 1.3mmx5 holes |
| SW-330115 | Steering Knuckle Pivot Ball Turnbuckle |
| SW-330116 | 14mm Knuckle Pivot Ball |
| SW-330117 | Knuckle Pivot Ball Washer |
| SW-330209 | S350 BK1Aluminum Rear Lower Arm Plate (0-3.0 D) |
| SW-330210 | S350 Aluminum Front Upper Arm Holder |
| SW-330211 | Front Super Shock Tower Aluminum Insert |
| SW-330212 | Rear Super Shock Tower Aluminum Insert |
| SW-330213 | S350 BK1Aluminum Rear Lower Arm Plate (0-2.5 D) |
| SW-330239 | S350 BE1 Series Motor Gear 14T |
| SW-330242 | S350 Series Lightened Aluminum CVD Axle (2pc) |
| SW-330243 | SWORKz 3x18mm Shock Hex Screw Set (Anti-Clockwise) |
| SW-330398 | S-WORKz Pro Wheel Nut |
| SW-330399 | S350 Series Aluminum Rear Chassis Brace Mount |
| SW-330401 | S350 Series Rear Hub Carriers Hing Pin with Nut |
| SW-410022A | SWORKz Strong Shock Bladder (Black)(8pc) |
| SW-510030 | S-WORKz LOGO Decal sheet |

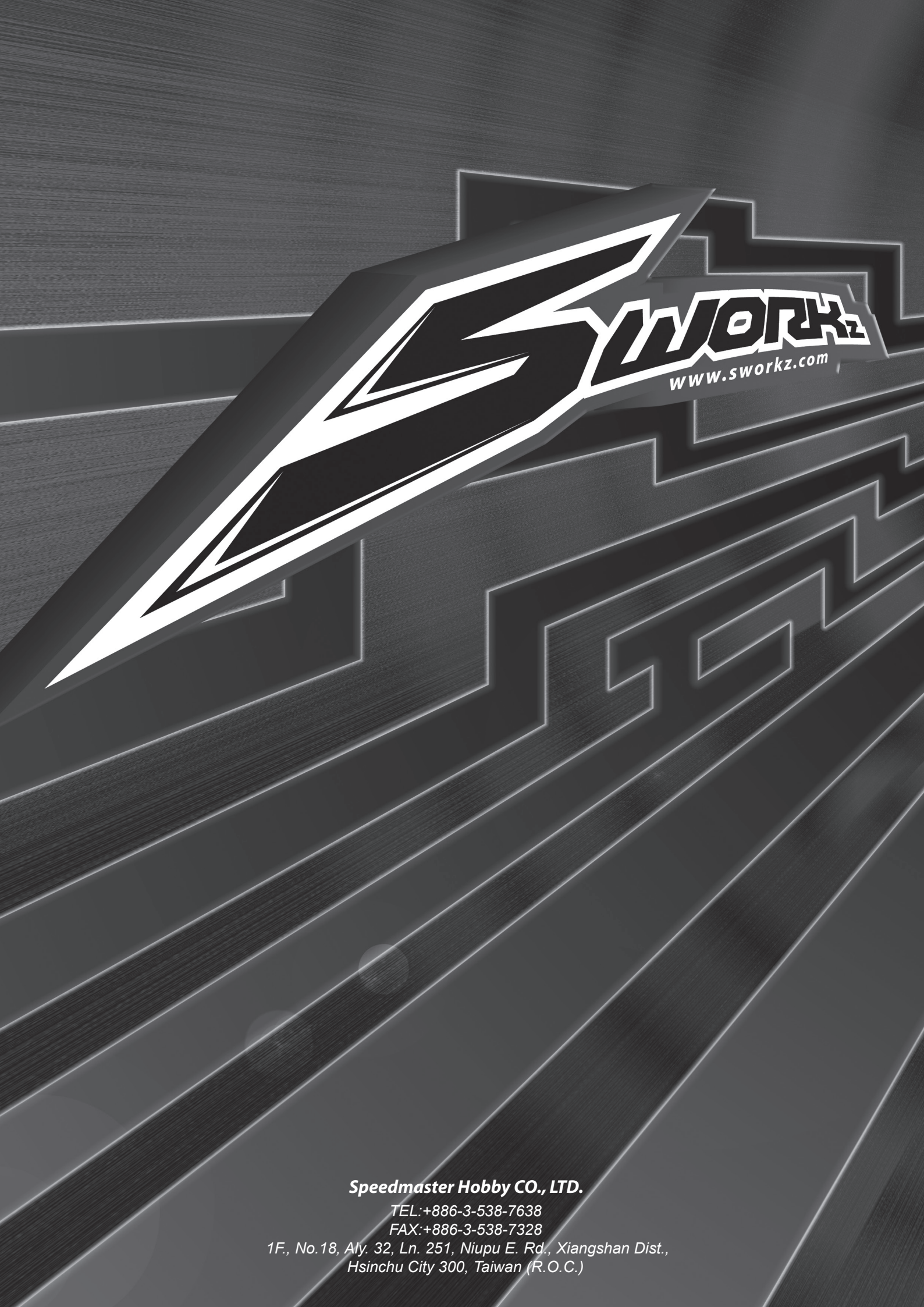


***Speedmaster Hobby CO., LTD.***

*TEL:+886-3-538-7638*
*FAX:+886-3-538-7328*
*1F., No.18, Aly. 32, Ln. 251, Niupu E. Rd., Xiangshan Dist.,*
*Hsinchu City 300, Taiwan (R.O.C.)*